INSTALLATION & CUSTOMIZATION REFERENCE

HCC/MVS 3.0

HOST

COMMUNICATION

CONTROL

11th edition

Document number: 600228-A

IMPRINT

11th Edition

This Manual has been written with utmost care. Textual or formal errors still cannot be excluded!

Protected trademarks are not marked as such in this Manual. The fact that these trademarks are not shown does not imply that the trade names are free for use.

All rights withheld, including those arising from applications for proprietary rights. The publisher retains all rights of disposition, such as copying or distribution.

Subject to changes without notice.

Extensions and changes to this Manual are based on PTF with status ZY00113, due to the fact that software changes were made at the same time.

Publisher: EMASS/GRAU Storage Systems GmbH,
Eschenstraße 3, D-89558 Böhmenkirch

Editor: GRAU Software GmbH,
Gottlieb-Daimler-Straße 17/3, 74385 D-Pleidelsheim

(c) 1997 by EMASS/GRAU Storage Systems GmbH, Eschenstr. 3, D-89558 Böhmenkirch.
(c) 1997 by GRAU Software GmbH, Gottlieb-Daimler-Straße 17/3, D-74385 Pleidelsheim.

11th Edition in August 1997

CONTENTS

1 INSTALLATION AND CUSTOMIZATION REFERENCE 1-1

1.1 LITERATURE 1-1

2 HACCPARM STATEMENTS (GENERAL INFORMATION) 2-1

2.1 HACCPARM SYNTAX 2-2
2.1.1 Single Statements 2-2
2.1.2 Multiple Line Statements 2-2
2.1.3 Comments 2-2
2.1.4 Examples 2-2

3 HACPARM1 STATEMENTS 3-1

3.1 ABSWAIT 3-4
3.2 AUTOCMD 3-5
3.3 AUTOFREEVOL 3-6
3.4 AUTOREPEAT 3-7
3.5 BUFNO 3-8
3.6 CLEAN 3-10
3.7 CMDEXIT 3-11
3.8 COMDEFN / EXCP 3-12
3.9 COMDEFN / VTAM LU 2 3-14
3.10 DEVTYPE 3-15
3.11 DSNGR 3-16
3.12 EJDSN 3-18
3.13 EJEXIT 3-19
3.14 EJVOL 3-20
3.15 FPMADEF 3-21
3.16 FPMAKEC 3-22
3.17 FPMALOAD 3-23
3.18 FPMAMVMAX 3-24
3.19 HACNET 3-25
3.20 JES 3-27
3.21 JOBGR 3-28
3.22 KEEPWT - TAPE DEVICES 3-29
3.23 LANG 3-30
3.24 LDEV=RXX/TXX 3-31
3.25 LDEV=RXX/TXX (DYN) 3-34
3.26 LDEV=RXX/TXX (FPMA) 3-36
3.27 LDEV=TXX (HWS) 3-38
3.28 LDEV=EXX 3-40
3.29 LDEV=FXX 3-42
3.30 LDEV=IXX 3-44
3.31 LDEV=WXX 3-46

3.32 LOCDESC 3-47
3.33 LOGSAVE 3-49
3.34 MAXCOOR 3-51
3.35 MAXTSO 3-52
3.36 MAXVOL 3-53
3.37 MOEXIT 3-54
3.38 MSG=ARC* 3-55
3.39 MSG=CBR2600A 3-56
3.40 MSG=CBR4405D 3-57
3.41 MSG=CBR4406D 3-58
3.42 MSG=CBR4423D 3-59
3.43 MSG=CBR4424D 3-60
3.44 MSG=CBR4426D 3-61
3.45 MSG=CBR4432D 3-62
3.46 MSG=CBR4438D 3-63
3.47 MSG=CBR4439D 3-64
3.48 MSG=IEC507D 3-65
3.49 MSG=IEC510D 3-66
3.50 MSG=IEC512I 3-67
3.51 MSG=IEC534D 3-68
3.52 MSG=IEC701D AND/OR EPT166A 3-69
3.53 MSG=IECTMS7 3-70
3.54 MSG=IEF238D 3-71
3.55 MSG=IEF433D 3-72
3.56 MSGAMU 3-73
3.57 MSGEXIT 3-75
3.58 MSGPREFIX 3-76
3.59 ODSCR 3-77
3.60 PDSNARCH 3-78
3.61 PDSNEXCN 3-79
3.62 PDSNMLGN 3-80
3.63 PDSNSTMS 3-81
3.64 PDSNULOG 3-82
3.65 PRTY EJ 3-83
3.66 PRTY JOB 3-84
3.67 PRTY KE 3-85
3.68 PRTY MO 3-86
3.69 PRTY MV 3-87
3.70 PRTY SCH 3-88
3.71 PRTY VI 3-89
3.72 ROUTCD 3-90
3.73 SECURITY 3-91
3.74 SENDEXIT 3-93
3.75 SMFRECORD 3-94
3.76 SSINAME 3-95
3.77 STAM 3-96
3.78 STATISTICS 3-97
3.79 STIMER 3-98
3.80 STORGRP 3-99
3.81 SWAPLIM 3-100
3.82 SYSDEFN 3-101
3.83 TLIPW 3-102

3.84 TMS=CNTT 3-103
3.85 TMS=EPIC 3-105
3.86 TMS=RMM1 3-106
3.87 TMS=SEQF 3-107
3.88 TMS=TLMS 3-108
3.89 TMS=UCC1 3-109
3.90 TMS=UCV5 3-110
3.91 TMS=ZARA 3-111
3.92 TMSEXIT 3-113
3.93 UCBATI 3-115
3.94 UNIT TYPE=CAR 3-116
3.95 UNIT TYPE=IOS 3-118
3.96 UNIT TYPE=OAD 3-119
3.97 UNITNUM 3-120
3.98 UPDEXIT 3-121
3.99 VI 3-122
3.100 VIEXIT 3-123
3.101 VOLGR 3-124
3.102 WTOEXIT 3-126

4 HACPARM2 STATEMENTS 4-1

4.1 POOLGR STATEMENT 4-1
4.2 VOLTAB STATEMENT 4-2

INDEX I-1

NOTES N-1

1 INSTALLATION AND CUSTOMIZATION REFERENCE

1.1 LITERATURE

Manual	Order number	Reference
General Information Manual	600226-A	G
Installation/Customization Guide	600227-A	G
System Reference Guide	600233-A	G
Operators Guide	600231-A	G
Command Reference	600223-A	G
Conversion Notebook	600224-A	G
Installation/Customization Reference	600228-A	G
Messages and Codes	600230-A	G
ISPF User Guide	600229-A	G
Release Guide	600232-A	G

G This Manual is part of the standard HCC documentation. Further copies of the respective Manual can be obtained from the publisher.

Z This Manual is a brochure at an additional charge, and is not part of the standard HCC documentation.

2 HACCPARM STATEMENTS (GENERAL INFORMATION)

The HACCPARM statements describe the AML components (hardware, software) and how HCC, the interfaces, exits etc. function.

The member name is freely selectable. Refer to the HACCPARM Library Section in the Installation and Customization Manual. All parameters in a PDS member are defined with LRECL=80.

2.1 HACCPARM Syntax

2.1.1 Single Statements

- The statements must start in column 1
- Parameters may only extend up to column 71
- The statement sequence is optional

2.1.2 Multiple Line Statements

- The statements must start in column 1
- Parameters must be terminated with "," before column 71
- Column 71 must be "BLANK"
- Column 72 must be "NON-BLANK" (continuation character)
- Continuation lines must start in column 16

2.1.3 Comments

- Marked with "*" in column 1 or
- separated from parameters by at least one blank
- Up to column 71

2.1.4 Examples

- A complete example is in the Appendix of the System Reference Guide as well as various configurations in the hlq.ZHC....SAMP library.

3 HACPARM1 STATEMENTS

MANDATORY STATEMENTS		
STATEMENT	FUNCTION	Page
JES	Job entry subsystem	3-27
LDEV	AML component description	3-31 (from)
PDSNtype	HCC file names	3-78 (from)
SYSDEFn	AML system configuration	3-101
UNIT	Unit description	3-116 (from)
VOLGR	Scratch tape selection using SCRATCH groups	3-124

OPTIONAL STATEMENTS A - L		
STATEMENT	FUNCTION	Page
ABSWAIT	Waiting for HCC command acceptance	3-4
AUTOCMD	Automatic commands after HCC start	3-5
AUTOFREEVOL	Automatic **FREEVOL** commands	3-6
AUTOREPEAT	Automatic command repetition	3-7
BUFNO	Work buffer sizes	3-8
CLEAN	Tape units cleaning	3-10
CMDEXIT	Command/Response Exit	3-11
COMDEFn	HCC-AML communication unit	3-14
DEVTYPE	Tape unit device type	3-15
DSNGR	SCRATCH tape selection using file names	3-16
EJDSN	Eject controlled by file names	3-18
EJEXIT	Eject exit	3-19
EJVOL	Eject controlled by VOLSER range	3-20
FPMADEF	Assigning SCRATCH groups to FPMA	3-21
FPMAKEC	Unload control for FPMA during KEEP	3-22
FPMALOAD	Selecting the load/unload algorithm	3-23
FPMAMVMAX	Controlling generation of MOVE commands	3-24
HACNET	Defining the APPC connection	3-25
JES	Job ENTRY subsystem selection	3-27
JOBGR	SCRATCH tape selection using job groups	3-28
KEEPWT	Wait time before sending the KEEP request	3-29
LANG	Selecting the language	3-30
LDEV	AML components definition	3-31 (from)
LOCDESC	Location description	3-47
LOGSAVE	Saving Message logs	3-49

OPTIONAL STATEMENTS M - Z		
STATEMENT	FUNCTION	Page
MAXCOOR	Maximal coordinate count	3-51
MAXTSO	ABS output buffer definition	3-52
MAXVOL	Maximal VOLSER count	3-53
MOEXIT	Mount exit	3-54
MSG	Automatic message reply	3-55 (from)
MSGAMU	Reaction to AMU messages	3-73
MSGEXIT	Message exit	3-75
MSGPREFIX	Defining the message prefix	3-76
ODSCR	Information on optical disk	3-77
PRTY	Basic priorities for selected commands	3-83 (from)
ROUTCD	Routing code for console messages	3-90
SECURITY	Internal/external access authorization	3-91
SENDEXIT	Send exit	3-93
SMFRECORD	Writing SMF	3-94
SSINAME	Subsystem name	3-95
STAM	Cooperation with STAM	3-96
STATISTICS	Robot statistics	3-97
STIMER	Interval timer interrupt period TRANSFER-LOG	3-98
STORGRP	Assigning volser masks to a Storage group	3-99
SWAPLIM	Maximum tape swap count	3-100
TLIPW	Password for tape label initialization	3-102
TMS	TMS standard exits	3-103 (from)
TMSEXIT	TMS exit module name	3-113
UCBATI	UCB attention index	3-115
UNITNUM	AML unit number sequence	3-120
VI	Insert control	3-122
VIEXIT	Insert exit	3-123
WTOEXIT	WTO exit	3-126

DESCRIPTION

3.1 ABSWAIT

WAITING FOR HCC COMMAND ACCEPTANCE (optional)
ABSWAIT=YES|NO

YES	ABBASEND waits for command confirmation
NO	ABBASEND does not wait for command confirmation

With ABSWAIT=YES, ABBASEND pauses during the appropriate processing for each command sent to HCC. This can be useful, for example, with **EJ** commands to ensure that the request is integrated in the HCC recovery.

The same effect can be achieved by specifying ABSWAIT=NO with the WAIT operand after each command. This method is generally better.

Example: `ABBASEND=YES`

When TSO/VTAM does not have enough OUTPUT buffer space, HCC may not return all messages to the TSO session during display commands because HCC must not wait when buffer shortages occur for a TSO user.

Remark: This parameter is only valid for ABBASEND with the previous functional scope.

3.2 AUTOCMD

AUTOMATIC COMMANDS AFTER HCC START	(optional)
AUTOCMD=Command[,INTV=nnnn]	

Command Any valid HCC command
nnnn Automatic repetition interval in minutes (maximum 9999 minutes)

AUTOCMD supports executing any valid HCC command. This is possible

- uniquely at HCC start (INTV not specified)
- at HCC start and periodically after the time interval elapses (INTV)

Default: None

Examples:

`AUTOCMD=LOGSTART`	Start HCC-LOG
*	
`AUTOCMD='SYSLOG ONLY'`	Only write to the System log when HCC log is inactive
*	
`AUTOCMD='BOFF 1,1'`	Barcode reader SYS 1/ ROB 1 inactive
*	
`AUTOCMD='BOFF 1,2'`	Barcode reader SYS 1/ ROB 2 inactive
*	
`AUTOCMD='FPMA 1,1,SLU'`	Start FPMA load/unload
*	
`AUTOCMD='FPMA 1,2,SLU'`	Start FPMA load/unload
*	
`AUTOCMD='DRQ',INTV=10`	Display pending requests every 10 minutes
*	
`AUTOCMD='INC 2,1,COOR=01010101',INTV=1440`	
*	Inventory on a tower coordinate every 24 hours (1440 minutes)

3.3 AUTOFREEVOL

AUTOMATIC FREEVOL COMMANDS	(optional)
AUTOFREEVOL=YES|NO	

YES: Automatic **FREEVOL** command by SCRATCH tape bottleneck
NO: No automatic **FREEVOL** command

AUTOFREEVOL triggers automatic procurement of scratch tapes.

AUTOFREEVOL=YES triggers a **FREEVOL REP** command when:

1. The defined scratch warning level is reached.
2. All scratch tapes marked in the HCC Archive mirror are set to NON-SCRATCH for one or more pools.

A FREEVOL with TYPE=OPT cannot be executed automatically.

Default: `AUTOFREEVOL=NO`

Example: `AUTOFREEVOL=YES`

When TMS is not used but the SCRATCH volsers provided in a SEQ. file, ensure that this file always includes the latest SCRATCH volsers. This means that the contents of a SEQ. file processed once by FREEVOL must be purged afterwards.

3.4 AUTOREPEAT

AUTOMATIC COMMAND REPETITION (optional)
AUTOREPEAT=YES|NO

YES: Repeats a pending command after an interval has elapsed
NO: No repetition

AUTOREPEAT controls whether a sent but not acknowledged command is repeated after 4 minutes.

This parameter is valid for AUTOREPEATS

- from a minor HCC to the major HCC
- from the major HCC or primary HCC to the AMU[1)] or AR[2)].

Conflict situations can be resolved with this command

Default: `AUTOREPEAT=NO`

Example: `AUTOREPEAT=YES` (recommended)

3.5 BUFNO

WORK BUFFER SIZES	(optional)

```
BUFNO ARC=xxxx
BUFNO CUU=xxxx
BUFNO EXC=xxxx
BUFNO MSG=xxxx
BUFNO REC=xxxx
BUFNO SFM=xxxx
BUFNO SSI=xxxx
```

BUFNO modifies the sizes of HCC internal buffers from their default sizes.

Default:	BUFNO ARC=0200	Archive	H59BFNO
	BUFNO CUU=0150	Units and Recovery Log	H50BFNO
	BUFNO EXC=0200	Exchange Log	H70BFNO
	BUFNO MSG=0150	Message Log	H60BFNO
	BUFNO REC=1000	APPC Receive Buffer	H54BFNO
	BUFNO SFM=0050	SSI Data-Buffer	ZHCCVT
	BUFNO SSI=0200	SSI Buffer	H52BFNO

These buffer sizes, ARC, CUU, EXC, MSG and SSI, can be modified to any value and only affect the virtual region size.

The SFM buffer is created above the 16 MB limit and can be modified accordingly.

The following message appears when the ARC, CUU, EXC, MSG or SSI is too small:

```
HAC180A BUFFER OVERFLOW, MODULE = HxxBUFx
```

The following message appears when the SFM buffer overflows:

```
HAC997A STIMER-WAIT THRESHOLD OVERFLOW,
        MAINTASK NOTIFICATION INHIBITED
```

The following message appears when the REC buffer overflows:

```
HAC060I TABELLEN ÜBERLAUF,ID=RECQ
```

The SSI= buffer should be adjusted accordingly when ejects run through ABBASEND, for example, when using the program X04EJ02 with more than 200 cartridges.

The same applies to the EXC= buffer when ejects run through a secondary HCC.

Example: `BUFNO ARC=195`

3.6 CLEAN

TAPE UNIT CLEANING	(optional)
CLEAN=nn,mmm,ttt CLEAN=AMU	

nn	Number of MOUNT/KEEPs before cleaning is triggered Valid range: 02 - 60
mmm	Max. usage of a cleaning tape Valid range: 005 - 500
ttt	Expected cleaning duration in seconds Valid range: 020 - 200
AMU	The AMU manages all drive cleaning.

CLEAN describes the cleaning cycles for tape stations and the usage of cleaning tapes.

Default: `CLEAN=50,500,100`

Example: `CLEAN=45,300,40`

A cartridge unit is cleaned after 45 MOUNT/KEEPs, a cleaning tape is automatically ejected after 300 cleaning processes and HCC selects the next available cleaning cartridge. HCC waits 40 seconds before sending the KEEP for the cleaning cartridge.

The MOUNT counter for cleaning cartridges is set to 0 after insert.

The AMU parameter specifies that all UNITs defined in the HACCPARM are cleaned under AMU (CleanManager) control. It is not possible to assign single drives to HCC for cleaning.

The UNIT command supports assigning cleaning management for single drives to either HCC or AMU.

3.7 CMDEXIT

COMMAND/RESPONSE EXIT	(optional)
CMDEXIT=modulename	

modulename Load module name

This parameter controls the User exit for operator commands or replies from the AMU.

The customer is responsible for the User exit itself.

CMDEXIT receives control before an operator command is processed or after an AMU reply.

Register 1 transfers a parameter list with the following information:

<W1> Pointer to operator command (maximum 124 chars.) or pointer to the AMU communication message (maximum 80 chars.), refer to the HCC Mapping Macro ZHCRMF (HCC Samplib).

<W2> Pointer to job name (maximum 8 chars.)

Register 15 must contain one of the following return codes when the exit returns:

0	=	ok	No changes	No message
4	=	ok	Changes made	Message HAC371I
8	=	nok	Error	Message HAC430I
12	=	ok	Changes made	No message

The CMDEXIT module must be reusable.

The module name is freely selectable.

Default: None

Example: `CMDEXIT=XYLMOD`

3.8 COMDEFn / EXCP

HCC-AML COMMUNICATION PATH	(optional)
COMDEFn=cuu1[,ALT=cuu2][,SYS=cpui][,EXCP] [,CTYPE=A|S]	

n:	AML system number (1 or 2)
cuu1:	MVS unit address; defined as a 3278 terminal on a local NON-SNA control unit.
cuu2:	Alternative communication path.
SYS=cpui	cpui is the SMFCPUID as defined in the SYS1.PARMLIB. This parameter supports COMDEFn definitions for a multiple CPU group in a HACCPARM1 member when different cuu addresses are used within the MVS systems involved for communication with the AML; cpui is optional.
EXCP:	Method based on the Execute Channel program.
CTYPE=A/S	A specifies asynchronous communication (default) S specifies synchronous communication.

COMDEFn describes the HCC-AML communication path for EXCP.

A HACNET parameter (VTAM LU 6.2) for communication with the AMU/AR may not be defined when this parameter is used. HACNET statements defining communication paths between MAJOR HCC and MINOR HCCs using VTAM LU 6.2 may be combined with COMDEF statements.

Default: EXCP as communication method

Only the Router computer (ABBA/1) supports synchronous communication at the present time. This parameter must **not** be specified for an AML/2 archive (or AML/E or AML/J).

COMDEFn / EXCP

Example:
```
COMDEF1=0566,ALT=02A7,EXCP,SYS=MVSP
COMDEF1=0013,EXCP,SYS=MVST
```

UCB address 0566 is selected for the "MVSP" (PRIMARY HCC) system communication with the ABBA/1 system. HCC can switch to the path with UCB address 02A7 should malfunctions occur, for example control unit failure.

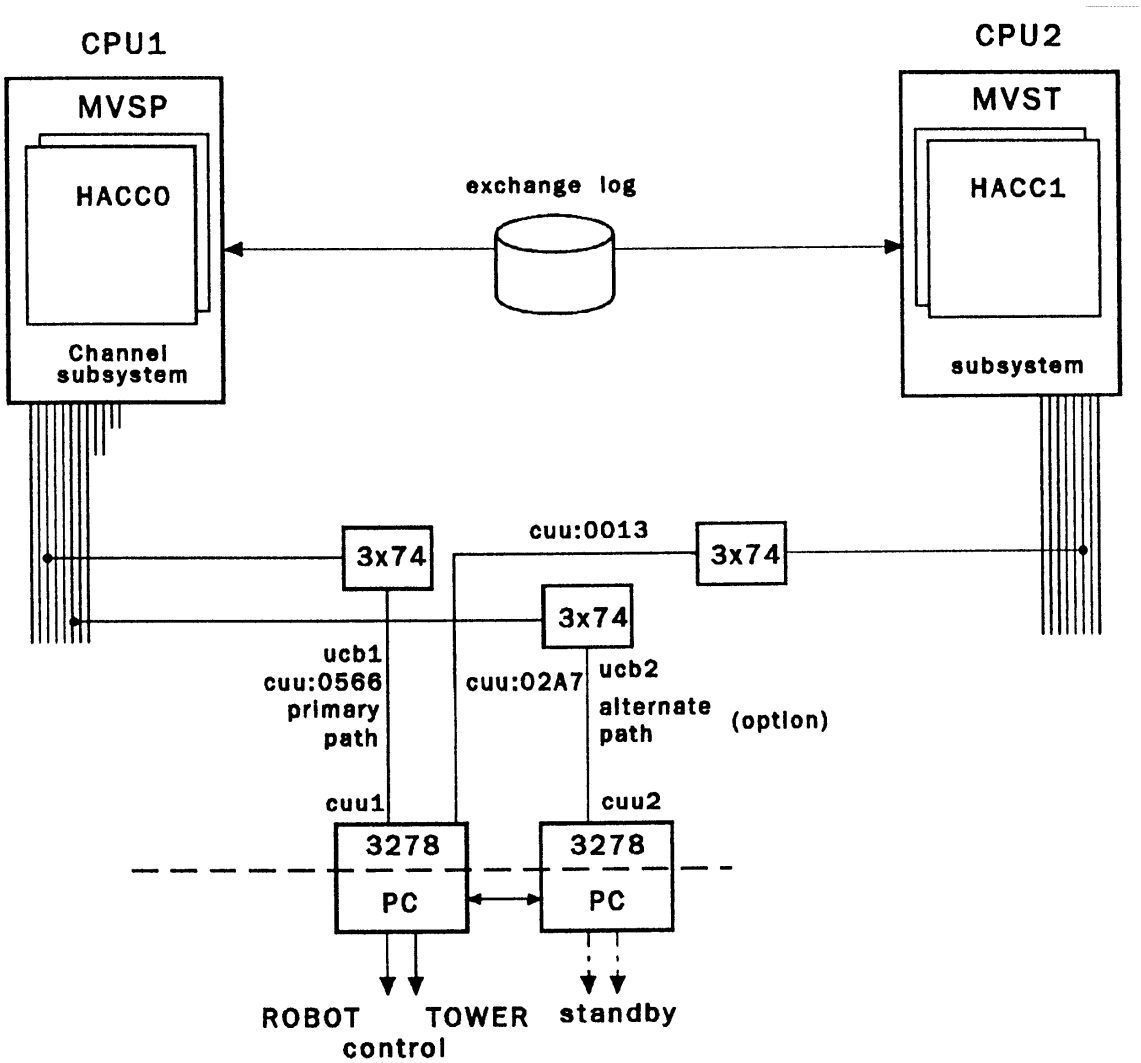

AML SYSTEM 1

The communication path over address 0013 is used when the PRIMARY HCC is changed from "MVSP" to "MVST". There is no alternative path for "MVST" in this example.

3.9 COMDEFn / VTAM LU 2

HCC-AML COMMUNICATION PATH (optional)
COMDEFn=luname1,acbname1,[ALT=luname2,acbname2],VTAM[,CTYPE=A|S]

n:	AML system number (1 or 2)
luname1:	Primary LU name.
luname2:	Alternative LU name.
acbname1:	Primary ACB name.
acbname2:	Alternative ACB name.
VTAM:	Communication method based on VTAM LU 2.0
CTYPE=A/S	A - specifies asynchronous communication (default)
	S - specifies synchronous communication.

COMDEFn describes the HCC-AML communication path for VTAM LU 2.

A HACNET parameter (VTAM LU 6.2) for communication with the AMU/AR may not be defined when this parameter is used. HACNET statements defining communication paths between MAJOR HCC and MINOR HCCs using VTAM LU 6.2 may be combined with COMDEF statements.

Only the Router computer (ABBA/1) supports synchronous communication at the present time. This parameter must **not** be specified for an AML/2 archive (or AML/E or AML/J).

3.10 DEVTYPE

TAPE UNIT DEVICE TYPES	(optional)
DEVTYPE=aabbccdd	

aabbccdd UCB DEVICE TYPE

DEVTYPE is planned for when new device characteristics are introduced in MVS. HCC only checks for "Cartridge unit" at the present time.

Default: `DEVTYPE=78008080`

3.11 DSNGR

SCRATCH TAPE SELECTION USING FILE NAMES (optional)
DSNGR=fromvol,tovol,nnnnn[,S=s],dsname

fromvol	Lowest VOLSER in group
tovol	Highest VOLSER in group
nnnnn	SCRATCH warning level 00001-99999
s	AML System number (default = 0)
dsname	Generic file name (1-44 characters) or partial file name starting with '*'

DSNGR selects scratch tapes using generic "dsname groups" in a similar manner to the method supported by the TLMS tape management system.

When an AML system number is not specified, selection is made using the AML system defined in the Archive mirror based on the unit demanded in the MVS mount message.

Partial file names (*filename) specify the significant part of a file name. This is used to examine the file name and for the scratch tape selection.

The first match to the file name defined here is used for the scratch tape selection. This implies first fit for generic as well as partial file names.

This selection is optional but, when specified, has priority over the VOLGR statement. PREFER= in the respective VOLGR statement defines the exact search algorithm.

Example:

```
DSNGR=010000,010999,00005,INDEX1.AB
DSNGR=011000,011999,00010,INDEX2.XYZ
```

The mount message

```
IEF233A M 0480,PRIVAT,,,,INDEX1.ABC.NNN
```

tasks HCC to assign scratch tapes from the number range 010000-010999.

A warning message is output when the HCC Archive mirror has less than 5 scratch tapes available.

This method of scratch tape selection is not recommended. When automatic tape management is used, an attempt should be made to integrate only the MVS standard (SCRTCH,PRIVAT) in the organization.

The reasons are:

- IBM/DFSMS concepts
- FPMA support

When FPMA support is in use, it is recommended to define the corresponding AML system in both HACCPARM statements.

The **MONITOR DSNAME** command must have been enabled by IPL or afterwards by AUTOCMD within the HACPARM1 during the HCC start.

Example: `AUTOCMD='OS MN DSNAME'`

3.12 EJDSN

EJECT CONTROLLED BY FILE NAMES (optional)
EJDSN=nn,s,dsname[,AUTOEJECT]

nn Eject unit number (01-nn)
s AML system number (1-2)
dsname Generic file name (1-44 characters)
AUTOEJECT Keep for the cartridge described with 'dsname' made directly in the

ATTENTION: OS MN DSNAME must be active

EJDSN selects tape ejections in a particular eject unit using generic file names.

This statement creates an assignment table between generic file names and eject units. The **EJDSN** operator command compares the file name with those in the table and adds the eject unit when they match.

The dataset specified in the MOUNT message is checked against the table for each MOUNT. The EJECT-TO-BE-DONE flag in the Archive is set when the dataset is found marked with 'AUTOEJECT' and the system and robot match.

This flag converts the KEEP to an EJECT volser, for example, the cartridge is moved directly from the drive to the specified eject unit.

The same applies when an appropriate command (**EJ**, **EJDSN** or **EJVOL**, refer to the HCC COMMAND REFERENCE) is used to set the EJECT-TO-BE-DONE flag before the KEEP.

Changes to the table are first effective after a HCC restart.

Eject units are created with LDEV statements; redefinitions are allowed.

Default: None

Example:
```
EJDSN=01,1,ABC
EJDSN=02,1,ALPHA.BETA.GAMMA
```

3.13 EJEXIT

EJECT EXIT	(optional)
EJEXIT=module-name	

module-name Load module name

This parameter controls the user exit for cartridge eject.

The customer can create the user exit for the installation environment when necessary.

The eject exit receives control after each eject. The archive mirror record of the ejected cartridge is then available.

The module names should not start with the HLQs or with HAC or ZHC because these are reserved for the HCC modules.

The Appendix of the System Reference Guide contains further information under Modifying the User exit.

Default: None

Example: `EJEXIT=XYLMOD`

EJVOL controls cartridge eject selection for a particular eject unit using a volser range.

This statement creates an assignment table between VOLSER ranges and eject units. The **EJDSN** operator command compares the VOLSER number with those in the table and adds the eject unit when they match.

The respective volser is searched for in the table when the MOUNT is positive. The EJECT-TO-BE-DONE flag in the Archive is set when a range marked with 'AUTOEJECT' is found for the volser and the system and robot match.

This flag converts the KEEP to an EJECT volser, for example, the cartridge is moved directly from the drive to the specified eject unit.

The same applies when an appropriate command (**EJ**, **EJDSN** or **EJVOL**, refer to the HCC COMMAND REFERENCE) is used to set the EJECT-TO-BE-DONE flag before the KEEP.

Changes to the table are first effective after a HCC restart.

Eject units are created with LDEV statements; redefinitions are allowed.

Default: None

Example:

```
EJVOL=01,1,CS0001,CS9999
EJVOL=02,1,000000,999999
```

3.15 FPMADEF

ASSIGNING SCRATCH POOLS TO FPMA	(optional)
FPMADEF=coor1,coor2,S=s,pool	

coor1	FMPA start coordinate
coor2	FPMA end coordinate
s	AML System (1,2)
pool	Scratch pool (PRIVAT, GREEN, ...)

FPMADEF assigns various scratch groups to an installed FPMA[1)].

The MVS standard scratch group "PRIVAT" automatically implies the "SCRTCH" group.

This parameter requires LDEV statements defining the FPMA, FPMALOC statements for the UNIT statements as well as VOLGR statements defining the SCRATCH pools.

Default: None

Example:

```
FPMADEF=04010101,04010225,S=1,PRIVAT (=SCRTCH)
FPMADEF=04010301,04010425,S=1,GREEN
FPMADEF=05010201,05010215,S=2,WHITE
FPMADEF=05010216,05010325,PRIVAT     (=SCRTCH)
```

It is recommended to use the same entries for the AML system number for the corresponding VOLGR= statements.

FPMA is only supported for the library type cartridge.

3.16 FPMAKEC

UNLOAD CONTROL FOR FPMA DURING KEEP	(optional)

```
FPMAKEC =YES
FPMAKEC =NO
FPMAKEC =ALWAYS
```

FPMAKEC controls the KEEP behavior.

YES — Conditional MOVE to home position;

- Robot busy --> KEEP in FPMA[1)], then automatic generation of **MOVE** command to the home position by HCC
- Robot available --> KEEP to home position

NO — Unconditional MOVE to FPMA[1)];
KEEP always in FPMA;
then automatic generation of **MOVE** command to the home position by HCC

ALWAYS — Unconditional MOVE to home position;
KEEP always to home position

Default: `FPMAKEC=YES`

Example: `FPMAKEC=NO`

3.17 FPMALOAD

SELECTING THE LOAD/UNLOAD ALGORITHM	(optional)
FPMALOAD = SEQ FPMALOAD = URO	

FPMALOAD controls loading/unloading the FPMAs[1)].

SEQ — Sequential servicing;
the FPMAs are loaded/unloaded with scratch cartridges according to the FPMADEF statements definition sequence.

URO — Rotating servicing;
the FPMAs are loaded/unloaded with scratch cartridges in rotation according to the FPMALOC statements using the defined MVS unit addresses.

Default: `FPMALOAD=SEQ`

Example: `FPMALOAD=URO`

3.18 FPMAMVMAX

CONTROLLING MOVE COMMAND GENERATION (optional)
FPMAMVMAX=nnnn

nnnn Maximum number of **MOVE** commands to FPMA[1)]

FPMAMVMAX determines the number of **MOVE** commands to load the FPMA.

The **FPMA SLU** command creates HCC internal **MOVE** commands.

HCC generates a second sequence of **MOVE** commands, using FPMAMVMAX as the count again, when load/unload activities are still open after the first set of **MOVE** commands.

Default: Internally calculated value.

Example: `FPMAMVMAX=10` (recommended initial value)

3.19 HACNET

DEFINING APPC CONNECTIONS (optional)

```
HACNET HID=xx,LU=lu,LM=mode[,SYS=cpuid]
HACNET HID=xx,LU=lu,LM=mode,LU2=lu2[,SYS=cpuid]

HACNET HID=xx,LU=lu,LM=mode,TPN=tp[,SYS=cpuid]
HACNET HID=xx,LU=lu,LM=mode,LU2=lu2,TPN=tp[,SYS=cpuid][,TYPE=PRI|ALT]
```

xx	HACC0 ID/AMU ID
lu	LU name for HID
mode	Mode name for session with lu
lu2	Second LU name for HID when lu can only run as a single session
tp	Name of the AMU[1] (HxxRTP) receive program
PRI	Describes the PRIMARY path (default)
ALT	Describes the ALTERNATE path

This parameter defines all LU 6.2 connections between the HCC or HCCs and the AMU[1)].

Only LU=.. need be specified in the case of two partners capable of running parallel sessions.

LU2=.. must also be defined when the partner is not capable of running parallel sessions so that the HCC communication task can establish a SEND and a RECEIVE conversation.

The TYPE parameter defines which path this HACNET statement describes.

The receive program name should be written as follows:

```
TPN=HxxRTP
```

This entry must be coordinated with the person who installed the AMU.

Default: None

Example 1:

```
HACNET HID=H1,LU=HACCLU1,LM=HACCMODE
HACNET HID=H2,LU=HACCLU2,LM=HACCMODE
```

HOST- HOST connection (partner capable of parallel sessions).

Example 2:

```
HACNET HID=A1,LU=RZKGPL50,LM=OBLU62S,
              LU2=RZKGPL49,TPN=H01RTP
HACNET HID=H1,LU=OBAPPC04,LM=OBLU62S
```

HOST- AMU connection (AMU[1)] only capable of single sessions).

3.20 JES

SELECTING JOB ENTRY SUBSYSTEM	(mandatory)
JES=JESn[,UNLOAD=YES|NO,DELAY=nn]	

Specifies the primary job entry subsystem; controls the message filter routines and the HCC mount/keep logic.

n=2 JES2 - unmodified MVS messages

n=3 JES3 - CHECK/MOUNT messages are checked including all other MVS messages with routing codes 3, 5

DELAY=nn Wait time before sending an MVS Unload command, specified in seconds, valid range nn = 00-99, default = 15.

UNLOAD=YES HCC tries to unload a mounted cartridge after a delay (15 seconds or the value specified with DELAY) with an MVS Unload command when a mount for a different unit is pending for the same volser **(default).**

UNLOAD=NO Deactivates the above logic and is therefore only useful within JES3 complexes.

Default: None

Example: `JES2`

3.21 JOBGR

SELECTING SCRATCH TAPES USING JOB NAMES (optional)
JOBGR=fromvol,tovol,nnnnn[,S=s],jobname

fromvol	Lowest VOLSER in group
tovol	Highest VOLSER in group
nnnnn	SCRATCH warning level 00001-99999
s	AML system number (default=0)
jobname	Generic job name (1-8 characters)

JOBGR supports selecting scratch tapes using generic or fully qualified "job name groups".

When an AML system number is not specified, selection is made using the AML system defined in the Archive mirror based on the unit demanded in the MVS mount message.

The first match to the file name defined here is used for the scratch tape selection. This implies first fit for generic as well as partial file names.

This selection is optional but, when specified, has priority over the VOLGR statement. PREFER= in the respective VOLGR statement defines the exact search algorithm.

Example:

```
JOBGR=010000,010999,00005,SAVEJOB
JOBGR=011000,011999,00010,ANYJOB
```

The mount message

```
SAVEJOB IEF233A M 0480,,,,INDEX1.ABC.NNN,PRIVAT
```

tasks HCC to assign scratch tapes from the number range 010000-010999.

A warning message is output when the HCC Archive mirror has less than 5 scratch tapes available

3.22 KEEPWT - TAPE DEVICES

WAIT TIME BEFORE SENDING THE KEEP REQUEST (optional)
KEEPWT=nn[,rr,ddd]

nn	Wait time before sending the first KEEP in seconds	nn =00-99
rr	Number of AUTO-REPEATs after N206 message	rr =00-99
ddd	Wait time before first send repeat in seconds	ddd =030-999

KEEPWT controls the wait time before a KEEP command is sent for tape devices and for the corresponding recovery measures.

The MVS KEEP message normally immediately follows the CLOSE for the file. A full cartridge takes approx. 45 seconds to rewind. The rewind time is not applicable for full tapes on 3490E units.

The **KEEP** command is sent immediately to AML as long as no other robot activity is pending. The robot removes the cartridge and, when this is not possible, then waits up to 60 seconds for the cartridge to be ejected. The N206 message is sent to HCC when the cartridge is still not ejected after this time.

The KEEPWT statement can modify this wait time. HCC first sends the KEEP task after this defined wait time has elapsed.

Further actions can be triggered when errors occur: the rr operand defines the number of automatic KEEP repeats and ddd defines the interval between the repeats.

Using KEEPWT can then only affect performance when the cartridge does not need the full rewind time and the corresponding KEEP request is the only task in the HCC wait queue.

The wait time for automatic cleaning should also be reduced when using KEEPWT. (Refer to the CLEAN statement).

Default: `KEEPWT=00`

Example: `KEEPWT=50,02,060`

Assumed rewind time 50 seconds, 2 repeats, each after 60 seconds.

KEEP commands for IBM 3995 - Operator Accessible Drives are processed without KEEP-WAIT-TIME.

3.23 LANG

SELECTING THE LANGUAGE	(optional)
LANG=E|G	

E	English
G	German

LANG selects the language for most of the HCC messages. The message numbers are the same in both languages. The prefix for the message number can be changed with the MSGPREFIX statement. (Refer to the MSGPREFIX statement).

Some messages are only output in English for program-technical reasons.

Default: `LANG=E`

Example: `LANG=G`

This parameter is interpreted during the HCC initialization phase; all messages before this phase are output in the default language (English).

3.24 LDEV=Rxx/Txx

AML COMPONENTS - RACK/TOWER	(mandatory)

```
LDEV=Rxx,coor,seg1,seg2,row1,row2,pos1,pos2,slots[,S=sys][,R=rob][,LIB=x]
LDEV=Txx,coor,seg1,seg2,row1,row2,pos1,pos2,slots[,S=sys][,R=rob][,LIB=x]
```

Rxx	Component number (rack)		
Txx	Component number (tower)		
coor	Component coordinate (corresponds to the component number)		
seg1/seg2	First/last segment in the component		
	Tower:		(01-99)
	Rack:	(AML/2, AML/E, AML/J)	(01-01)
		(ABBA/1)	(01-99)
row1/row2	First/last row in segment		
pos1/pos2	First/last position in row		
slots	Number of slots in a row		(01-99)
sys	1	1. AML System	(Default)
	2	2. AML System	
rob	1	Robot 1	(Default)
	2	Robot 2	
	1,2	Robots 1 and 2	
x	C	Library type is Cartridge	(Default)
	O	Library type is Optical	

LDEV=Rxx/Txx defines the coordinates of the racks/towers in the AML system. A separate LDEV statement is required for each AML unit installed.

The LDEV=Rxx/Txx statement using a twin-robot system with 3 towers and 2 racks as an example.

ABBA/1/ AML/2

```
LDEV=T01,01,01,32,01,18,01,10,10,S=1,R=1,2   (tower 5760 cart.)
LDEV=T02,02,01,32,01,15,01,10,10,S=1,R=1,2   (tower 4800 cart.)
LDEV=T03,03,01,16,01,15,01,10,10,S=1,R=1,2   (tower 2400 cart.)
```

ABBA/1

```
LDEV=R04,04,01,03,01,04,01,25,25,S=1,R=1     (rack 300 cart.)
LDEV=R05,05,01,06,01,04,01,25,25,S=1,R=2     (rack 600 cart.)
```

AML/2

```
LDEV=R04,04,01,01,01,12,01,10,10,S=1,R=1
LDEV=R05,05,01,01,01,12,01,10,10,S=1,R=1
LDEV=R06,06,01,01,01,12,01,10,10,S=1,R=1     (rack 360 cart.)
LDEV=R07,07,01,01,01,12,01,10,10,S=1,R=2
LDEV=R08,08,01,01,01,12,01,10,10,S=1,R=2
LDEV=R09,09,01,01,01,12,01,10,10,S=1,R=2     (rack 360 cart.)
```

The LDEV=Txx statement using a twin-robot system for mixed media (cartridges and optical disks) as an example.

AML/2

```
LDEV=T01,01,01,21,01,18,01,10,10,S=1,R=1,2,LIB=C
LDEV=T01,01,22,22,01,13,01,22,22,S=1,R=1,2,LIB=O
LDEV=T01,01,23,24,01,18,01,10,10,S=1,R=1,2,LIB=C
LDEV=T01,01,25,30,01,13,01,22,22,S=1,R=1,2,LIB=O
LDEV=T01,01,31,32,01,18,01,10,10,S=1,R=1,2,LIB=C
```

13 rows each with 11 physical slots in each tower segment are reserved for ODs. 2 slots are defined for an OD, for example, the number of slots specified in the LDEV statement (22) corresponds to space for 11 ODs.

The LDEV=Rxx statement using an AML/J system with one storage element and E/I/F storage as an example.

AML/J

```
LDEV=R01,01,01,01,01,03,01,30,30,S=1,R=1
LDEV=R02,02,01,01,01,02,01,45,45,S=1,R=1
LDEV=R03,03,01,01,01,05,01,45,45,S=1,R=1
```

Slot losses for the AMU and drives are not considered in this example.

LDEV statement modifications require a correction to the HCC Archive mirror (generation refer to HAA).

All towers and racks must be numbered continuously and in ascending sequence.

3.25 LDEV=Rxx/Txx (DYN)

AML COMPONENTS - DYNAMIC AREA	(optional)

LDEV=Rxx,coor,seg1,seg2,row1,row2,pos1,pos2,slots[,S=sys][,R=rob],DYN[type][,LIB=x]
LDEV=Txx,coor,seg1,seg2,row1,row2,pos1,pos2,slots[,S=sys][,R=rob],DYN[type][,LIB=x]

Rxx	Component number (rack)		
Txx	Component number (tower)		
coor	Component coordinate (corresponds to component number)		
seg1/seg2	First/last segment in the component		
	Tower:		(01-99)
	Rack:	(AML/2, AML/E, AML/J)	(01-01)
		(ABBA/1)	(01-99)
row1/row2	First/last row in segment		
pos1/pos2	First/last position in row		
slots	Number of slots in a row		(01-99)
sys	1	1. AML system	(Default)
	2	2. AML system	
rob	1	Robot 1	(Default)
	2	Robot 2	
		1,2 Robots 1 and 2	
type	HOR	horizontal storage	
	VER	vertical storage	(Default)
x	C	Library type is Cartridge	(Default)

LDEV=Rxx/Txx DYN **redefines** the existing rack/tower coordinates in the AML system. 2 LDEV statements are required for each dynamic (partial) area, one LDEV statement describing the hardware and one LDEV-DYN statement describing the logical area.

A dynamic area is not supported for library type Optical.

The LDEV=Rxx/Txx statement using a dynamic area in tower 1 with 640 slots (horizontal, cyclic) as an example.

ABBA/1/ AML/2/E

```
LDEV=T01,01,01,32,01,18,01,10,10,S=1,R=1,2
LDEV=T01,01,01,32,17,18,01,10,10,S=1,R=1,2,DYN,HOR
```

The LDEV=Rxx/Txx statement using a dynamic area in 2 towers each with 5760 slots as an example.

ABBA/1/ AML/2/E

```
LDEV=T02,02,01,32,01,18,01,10,10,S=1,R=1,2
LDEV=T02,02,01,32,01,18,01,10,10,S=1,R=1,2,DYN,VER
LDEV=T03,03,01,32,01,18,01,10,10,S=1,R=1,2
LDEV=T03,03,01,32,01,18,01,10,10,S=1,R=1,2,DYN,VER
```

The LDEV=Rxx statement using a dynamic area within an AML/J system with one storage element as an example.

AML/J

```
LDEV=R01,01,01,01,01,03,01,30,30,S=1,R=1
LDEV=R01,01,01,01,01,03,01,30,30,S=1,R=1,DYN
LDEV=R02,02,01,01,01,02,01,45,45,S=1,R=1
LDEV=R02,02,01,01,01,02,01,45,45,S=1,R=1,DYN
LDEV=R03,03,01,01,01,05,01,45,45,S=1,R=1
LDEV=R03,03,01,01,01,05,01,45,45,S=1,R=1,DYN
```

Slot losses for the AMU and drives are not considered in this example.

LDEV statement modifications require a correction to the HCC Archive mirror (generation refer to HAA).

HCC uses all of the redefined dynamic areas as a complete, contiguous dynamic area within an AML system. Dynamic areas used within Major/Minor complexes must be defined separately and must not overlap.

This is necessary because all primary HCCs represent independent systems as far as datasets are concerned.

3.26 LDEV=Rxx/Txx (FPMA)

AML COMPONENTS - FPMA	(optional)

```
LDEV=Rxx,coor,seg1,seg2,row1,row2,pos1,pos2,slots[,S=sys][,R=rob][,LIB=x],FPMA
LDEV=Txx,coor,seg1,seg2,row1,row2,pos1,pos2,slots[,S=sys][,R=rob][,LIB=x],FPMA
```

Rxx	Component number (rack)		
Txx	Component number (tower)		
coor	Component coordinate (corresponds to component number)		
seg1/seg2	First/last segment in the component		
	Tower:		(01-99)
	Rack:	(AML/2, AML/E, AML/J)	(01-01)
		(ABBA/1)	(01-99)
row1/row2	First/last row in the segment		
pos1/pos2	First/last position in the row		
slots	Number of slots in a row		(01-99)
sys	1	1. AML system	(Default)
	2	2. AML system	
rob	1	Robot 1	(Default)
	2	Robot 2	
	1,2	Robots 1 and 2	
x	C	Library type is Cartridge	(Default)

LDEV=Rxx/Txx FPMA **redefines** the existing rack/tower coordinates in the AML system. 2 LDEV statements are required for each FPMA, one LDEV statement for the hardware description and one LDEV-FPMA statement for the FPMA description.

A dynamic area is not supported for library type Optical.

The LDEV=Rxx/Txx statement using a FPMA in rack 1 with 300 slots serviced by robot 1 as an example.

ABBA/1:

```
LDEV=R01,01,01,03,01,04,01,25,25,S=1,R=1,LIB=C
LDEV=R01,01,01,03,01,04,01,25,25,S=1,R=1,LIB=C,FPMA
```

AML/2:

```
LDEV=R01,01,01,01,01,12,01,10,10,S=1,R=1,LIB=C
LDEV=R02,02,01,01,01,12,01,10,10,S=1,R=1,LIB=C
LDEV=R03,03,01,01,01,12,01,10,10,S=1,R=1,LIB=C
LDEV=R01,01,01,01,01,12,01,10,10,S=1,R=1,LIB=C,FPMA
LDEV=R02,02,01,01,01,12,01,10,10,S=1,R=1,LIB=C,FPMA
LDEV=R03,03,01,01,01,12,01,10,10,S=1,R=1,LIB=C,FPMA
```

LDEV statement modifications require a correction to the HCC Archive mirror (generation refer to HAA).

A complete example can be found in the Appendix and includes all statements required to install FPMAs.

3.27 LDEV=Txx (HWS)

AML COMPONENTS - HCC WORKING STORAGE (HWS) (optional)
LDEV=Txx,coor,seg1,seg2,row1,row2,pos1,pos2,slots[,S=sys][,R=rob][,LIB=x],HWS

Txx	Component number (tower)		
coor	Component coordinate (corresponds to component number)		
seg1/seg2	First/last segment in the component		
row1/row2	First/last row in the segment		
pos1/pos2	First/last position in the row		
slots	Number of slots in a row		(01-25)
sys	1	1. AML system	(Default)
	2	2. AML system	
rob	1	Robot 1	(Default)
	2	Robot 2	
	1,2	Robots 1 and 2	
x	C	Library type is Cartridge	(Default)

LDEV=Rxx/Txx HWS **redefines** the existing rack/tower coordinates in the AML system. 2 LDEV statements are required for each dynamic (partial) area, one LDEV statement describing the hardware and one LDEV-HWS statement describing the logical area.

The LDEV=Txx statement using a HCC work area (HWS) in tower 1 with 10 slots as an example.

```
LDEV=T01,01,01,32,01,18,01,10,10,S=1,R=1,2,LIB=C
LDEV=T01,01,32,32,09,09,01,10,10,S=1,R=1,2,LIB=C,HWS
```

LDEV statement modifications require a correction to the HCC Archive mirror (generation refer to HAA).

A HWS can only be defined in a tower of an ABBA/1 or AML /2 twin-robot system. Only one work area is possible per AML system. At least as many HWS slots as installed tape units should be defined. However, more HWS slots than foreign mount compartments are not necessary.

A HWS is only supported for library type Cartridge.

3.28 LDEV=Exx

AML COMPONENTS - EJECT AREA	(mandatory)
LDEV=Exx,00,02,02,row1,row2,pos1,pos2,slots[,S=sys][,R=rob][,LIB=x]	

Exx	Component number (eject area)		
row1/row2	First/last row in the segment		
pos1/pos2	First/last position in the row		
slots	Number of slots in a row		(01-25)
sys	1	1. AML system	(Default)
	2	2. AML system	
rob	1	Robot 1	(Default)
	2	Robot 2	
x	C	Library type is Cartridge	(Default)
	O	Library type is Optical	

LDEV=Exx defines the eject area coordinates in the AML system. A separate LDEV statement is required for each AML unit installed.

Eject areas for library type Cartridge can overlap other insert/eject areas with the same library type.

Eject areas for library type Cartridge must not overlap other insert/eject areas with the library type Optical.

Eject areas with library type Optical must not overlap.

Organizational separation must be ensured for overlapping areas so that areas are not used for different functions at the same time.

The LDEV=Exx statement using 2 twin-robot systems with 4 E/I/F storage areas (standard) for AML/2 as an example.

AML/2

```
LDEV=E01,00,02,02,01,11,01,10,10,S=1,R=1  (110 slots)
LDEV=E11,00,02,02,11,11,01,10,10,S=1,R=1  (10 slots)
LDEV=E02,00,02,02,13,23,01,10,10,S=1,R=2  (110 slots)
LDEV=E12,00,02,02,23,23,01,10,10,S=1,R=2  (10 slots)
LDEV=E03,00,02,02,01,11,01,10,10,S=2,R=1  (110 slots)
LDEV=E13,00,02,02,11,11,01,10,10,S=2,R=1  (10 slots)
LDEV=E04,00,02,02,13,23,01,10,10,S=2,R=2  (110 slots)
LDEV=E14,00,02,02,23,23,01,10,10,S=2,R=2  (10 slots)
```

The LDEV=Exx statement using an ABBA/1 system as an example.

ABBA/1

```
LDEV=E01,00,02,02,01,03,01,25,25,S=1,R=1  (75 slots)
LDEV=E11,00,02,02,03,03,01,25,25,S=1,R=1  (25 slots)
```

The LDEV=Exx statement using an AML/J system with 2 E/I/F storage areas as an example.

AML/J

```
LDEV=E01,00,02,02,01,01,01,10,10,S=1,R=1  (10 slots)
LDEV=E11,00,02,02,01,01,01,01,10,S=1,R=1  (1 slot)
LDEV=E02,00,02,02,02,02,01,10,10,S=1,R=1  (10 slots)
LDEV=E12,00,02,02,02,02,01,01,10,S=1,R=1  (1 slot)
```

The LDEV=Exx statement using an AML/2 system with optical disks (OD) and cartridges.

AML/2

```
LDEV=E13,00,02,02,04,06,01,10,10,S=1,R=1,LIB=C  (30 slots)
LDEV=E18,00,02,02,01,08,01,10,10,S=1,R=1,LIB=C  (80 slots)
LDEV=E19,00,02,02,11,11,01,22,22,S=1,R=1,LIB=O  (11 slots)
LDEV=E23,00,02,02,15,17,01,10,10,S=1,R=2,LIB=C  (30 slots)
LDEV=E28,00,02,02,13,20,01,10,10,S=1,R=2,LIB=C  (80 slots)
LDEV=E29,00,02,02,23,23,01,22,22,S=1,R=2,LIB=O  (11 slots)
```

LDEV statement modifications require a correction to the HCC Archive mirror (generation refer to HAA).

These definitions must match those for the AR/AMU[1)] ·

3.29 LDEV=Fxx

AML COMPONENTS - FOREIGN MOUNT AREA (optional)
LDEV=Fxx,00,03,03,row1,row2,pos1,pos2,slots[,S=sys][,R=rob][,LIB=x]

Fxx	Component number (foreign mount area)		
row1/row2	First/last row in the segment		
pos1/pos2	First/last position in the row		
slots	Number of slots in a row		(01-25)
sys	1	1. AML system	(Default)
	2	2. AML system	
rob	1	Robot 1	(Default)
	2	Robot 2	
x	C	Library type is Cartridge	(Default)

LDEV=Fxx defines the foreign mount area coordinates in the AML system. A separate LDEV statement is required for each AML unit installed.

Foreign mount area must **not** overlap insert and eject areas.

Foreign mount is not supported for optical disks (OD).

The LDEV=Fxx statement using 2 twin-robot systems with 4 E/I/F storage areas (standard) for AML/2 as an example.

AML/2 `LDEV=F01,00,03,03,12,12,01,10,10,S=1,R=1,LIB=C` (10 slots)
`LDEV=F02,00,03,03,24,24,01,10,10,S=1,R=2,LIB=C` (10 slots)
`LDEV=F03,00,03,03,12,12,01,10,10,S=2,R=1,LIB=C` (10 slots)
`LDEV=F04,00,03,03,24,24,01,10,10,S=2,R=2,LIB=C` (10 slots)

The LDEV=Fxx statement using an ABBA/1 system as an example.

ABBA/1: `LDEV=F01,00,03,03,08,08,20,25,25,S=1,R=1,LIB=C` (6 slots)

The LDEV=Fxx statement using an AML/J system as an example.

AML/J: `LDEV=F01,00,03,03,01,01,10,10,10,S=1,R=1,LIB=C` (1 slots)

LDEV statement modifications require a correction to the HCC Archive mirror (generation refer to HAA).

These definitions must match those for the AR/AMU[1)]. To do this, execute the **DLC** command as described in the respective Sections of the COMMAND REFERENCE Manual. This assigns existing entries to the relative, current coordinates.

3.30 LDEV=Ixx

AML COMPONENTS - INSERT AREA	(mandatory)
LDEV=Ixx,00,01,01,row1,row2,pos1,pos2,slots[,S=sys][,R=rob][,LIB=x]	

Ixx	Component number (insert area)		
row1/row2	First/last row in the segment		
pos1/pos2	First/last position in the row		
slots	Number of slots in a row		(01-25)
sys	1	1. AML system	(Default)
	2	2. AML system	
rob	1	Robot 1	(Default)
	2	Robot 2	
x	C	Library type is Cartridge	(Default)
	O	Library type is Optical	

LDEV=Ixx defines the insert area coordinates in the AML system. A separate LDEV statement is required for each AML unit installed.

Insert areas for library type Cartridge can overlap other insert/eject areas with the same library type.

Insert areas for library type Optical can overlap other insert areas with the same library type.

Insert areas for library type Optical must not overlap other eject areas with the library type Optical or with insert/eject areas with library type Cartridge.

Organizational separation must be ensured for overlapping areas so that areas are not used for different functions at the same time.

The LDEV=Ixx statement using 2 twin-robot systems with 4 E/I/F storage areas (standard) for AML/2 as an example.

AML/2	`LDEV=I01,00,01,01,01,01,01,01,10,S=1,R=1`	(1 slot)
	`LDEV=I11,00,01,01,01,01,01,10,10,S=1,R=1`	(10 slots)
	`LDEV=I91,00,01,01,01,11,01,10,10,S=1,R=1`	(110 slots)
	`LDEV=I02,00,01,01,13,13,01,01,10,S=1,R=2`	(1 slot)
	`LDEV=I12,00,01,01,13,13,01,10,10,S=1,R=2`	(10 slots)
	`LDEV=I92,00,01,01,13,23,01,10,10,S=1,R=2`	(110 slots)
	`LDEV=I03,00,01,01,01,01,01,01,10,S=2,R=1`	(1 slot)
	`LDEV=I13,00,01,01,01,01,01,10,10,S=2,R=1`	(10 slots)
	`LDEV=I93,00,01,01,01,11,01,10,10,S=2,R=1`	(110 slots)
	`LDEV=I04,00,01,01,13,13,01,01,10,S=2,R=2`	(1 slot)
	`LDEV=I14,00,01,01,13,13,01,10,10,S=2,R=2`	(10 slots)
	`LDEV=I94,00,01,01,13,23,01,10,10,S=2,R=2`	(110 slots)

The LDEV=Ixx statement using an ABBA/1 system as an example.

ABBA/1	`LDEV=I01,00,01,01,01,04,01,25,25,S=1,R=1`	(100 slots)
	`LDEV=I11,00,01,01,04,04,01,25,25,S=1,R=1`	(25 slots)

The LDEV=Ixx statement using an AML/J system with 2 E/I/F storage areas as an example.

AML/J	`LDEV=I01,00,01,01,01,01,01,10,10,S=1,R=1`	(10 slots)
	`LDEV=I11,00,01,01,01,01,01,01,10,S=1,R=1`	(1 slot)
	`LDEV=I02,00,01,01,02,02,01,10,10,S=1,R=1`	(10 slots)

The LDEV=Ixx statement using an AML/2 system with optical disks (=D) and cartridges as an example.

AML/2	`LDEV=I10,00,01,01,01,09,01,10,10,S=1,R=1,LIB=C`	(90 slots)
	`LDEV=I11,00,01,01,10,11,01,22,22,S=1,R=1,LIB=O`	(22 slots)

LDEV statement modifications require a correction to the HCC Archive mirror (generation refer to HAA).

These definitions must match those for the AR/AMU[1)]

3.31 LDEV=Wxx

AML COMPONENTS - CP[1]	(mandatory)
LDEV=Wxx,00,00,00,00,00,pos1,pos2,slots[,S=sys][,R=rob][,LIB=x]	

Wxx	Problem box component number (cartridge pocket)		
slots	Number of slots in a row		(01)
sys	1	1. AML system	(Default)
	2	2. AML system	
rob	1	Robot 1	(Default)
	2	Robot 2	
x	C	Library type is Cartridge	(Default)

LDEV=Wxx defines the problem box (cartridge pocket) coordinates in the AML system. A separate LDEV statement is required for each AML unit installed.

The problem box (cartridge pocket) can only be defined with the library default type LIB=C. HCC and AR/AMU[2] use this area for all supported data media.

Examples

```
LDEV=W01,00,00,00,00,00,01,01,01,S=1,R=1
LDEV=W02,00,00,00,00,00,02,02,01,S=1,R=2
LDEV=W03,00,00,00,00,00,01,01,01,S=2,R=1
LDEV=W04,00,00,00,00,00,02,02,01,S=2,R=2
```

The slots for the problem box are managed by the AR[2)] or the AMU[2)] and therefore only one slot may be defined per problem box.

LDEV statement modifications require a correction to the HCC Archive mirror (generation refer to HAA). These definitions must match those for the AR/AMU[2].

The problem box is used for both cartridges and optical disks (OD).

[1] CP = Problem box (cartridge pocket)
[2] AR/AMU = Archive computer ABBA/1 or Archive Management Unit AML/2, AML/E, AML/J

3.32 LOCDESC

LOCATION DESCRIPTION	(optional)
LOCDESC SYS=sys,UNIT=auu,FROMCOOR=fromcoor,TOCOOR=tocoor,LOCATION=loc	

sys	1	1. AML system	(Default)
	2	2. AML system	

auu AML unit name

a	= T	(tower)
	= R	(rack)
	= D	(tape)
	= E	(eject)
	= I	(insert)
	= F	(foreign mount)
	= W	(problem box / cartridge pocket)
uu	= Unit number (00-99)	

fromcoor	Lowest coordinate of unit auu
tocoor	Highest coordinate of unit auu
loc	Linear coordinate of unit auu

The LOCDESC statement uses linear coordinates (locations) to provide a complete picture of the installed AML system. This picture is required for priority calculations for the movement path. In the case of several complexes, the situation can arise that units are not defined completely or not defined at all.

An example:

- HACC1 uses 5760 VOLSERs in TOWER T01,
- HACC2 uses 5760 VOLSER in TOWER T02. HACC1 is MAJOR-HCC.

HACC1 can only calculate the movement path for HACC2 actions when the information for tower 2 has been provided using the LOCDESC statement because T02 does NOT have to be defined in the HACC1 Archive mirror.

All components must be defined with this statement for a complete priority calculation.

LOCDESC statement example:

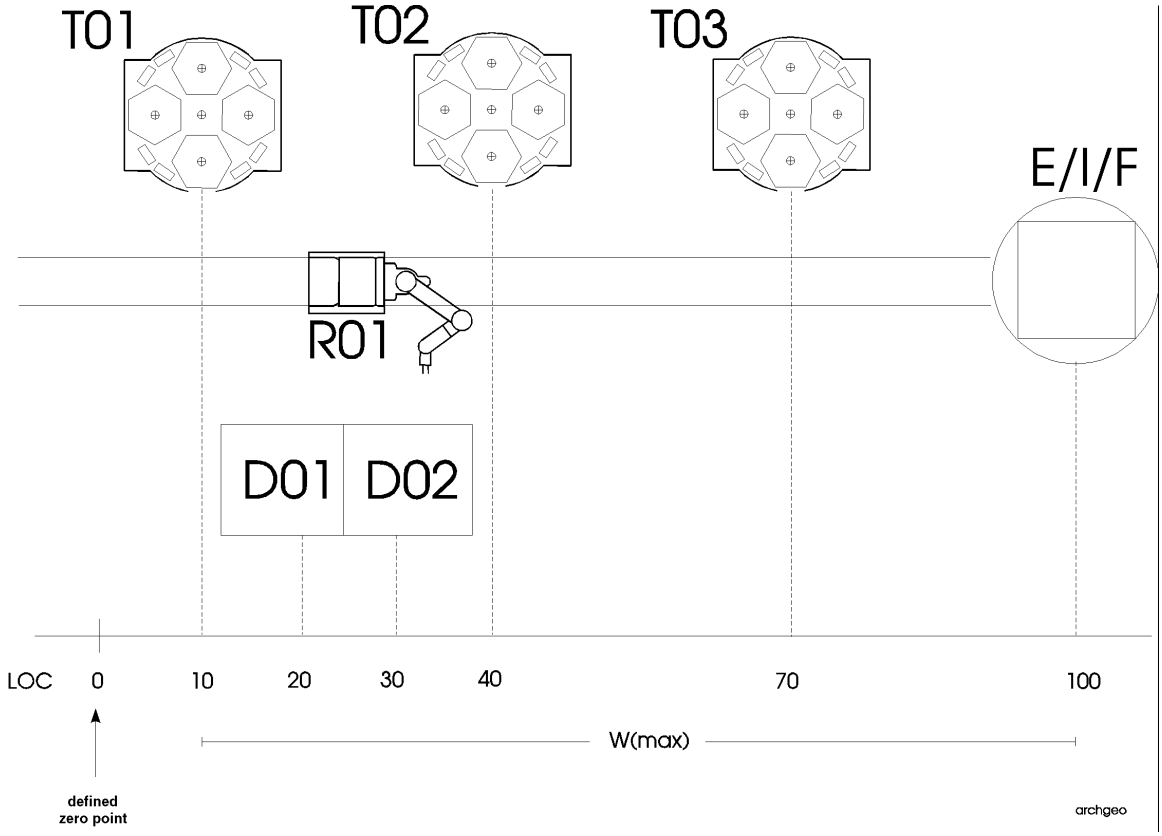


```
LOCDESC SYS=1,UNIT=T01,FROMCOOR=01010101,TOCOOR=01321810,LOCATION=10
LOCDESC SYS=1,UNIT=T02,FROMCOOR=02010101,TOCOOR=02321810,LOCATION=40
LOCDESC SYS=1,UNIT=T03,FROMCOOR=03010101,TOCOOR=03321810,LOCATION=70
LOCDESC SYS=1,UNIT=D01,FROMCOOR=00000101,TOCOOR=00000101,LOCATION=20
LOCDESC SYS=1,UNIT=D02,FROMCOOR=00000201,TOCOOR=00000201,LOCATION=30
LOCDESC SYS=1,UNIT=I01,FROMCOOR=00010101,TOCOOR=00010610,LOCATION=100
LOCDESC SYS=1,UNIT=E01,FROMCOOR=00020701,TOCOOR=00020910,LOCATION=100
LOCDESC SYS=1,UNIT=F01,FROMCOOR=00031001,TOCOOR=00031210,LOCATION=100
LOCDESC SYS=1,UNIT=W01,FROMCOOR=00000001,TOCOOR=00000001,LOCATION=100
```

Refer to the ARCHIVE GEOMETRY Section in the System Reference Guide for further information.

3.33 LOGSAVE

SAVING MESSAGE LOGS	(optional)

```
LOGSAVE SYSOUT=x
LOGSAVE DSN=base.gdg[,UNIT=unit][,CYL=(pri,sec)]
```

x	Alphanumeric character for the SYSOUT class	(A to Z or 0 to 9)
DSN	DS-Name for GDG base	(Maximum 35 characters)
unit	Describes UNIT as group or device type	(Default: SYSDA)
CYL	Space is allocated in cylinders	
pri	Primary space quantity, maximum 3 digits	(Default: 010)
sec	Secondary space quantity, maximum 3 digits	(Default: 005)

When this statement is included in the HACPARM1, all Message logs are saved to the GDG file or SYSOUT after the following events:

1.) After the subtask has been started, all Message logs with valid data are saved.

Manual:	LOGSTART	(HCC operator command)
Automatic:	AUTOCMD=LOGSTART	(HACPARM1 statement)

2.) After Log switch, the last Message log used is saved after it has been closed.

Manual:	LOGSW	(HCC operator command)
Automatic:	When the Log file is *full* and has been closed.	

3.) After the Message log has been stopped (**LOGSTOP**) and closed manually, the last Message log used is copied to SYSOUT or the GDG file.

The Message log file is only saved after HCC termination when it was stopped with the **LOGSTOP** command before the **END** command was entered.

Saved Message log files are marked as invalid.

A saved Message log file is marked as invalid. The first record is overwritten with:

- time saved (date, time)
- own file name and
- where the save was made.

Apart from the saved data, the saved Log file also includes a header record with the information from the first record in the previous Message log but without date and time.

hlq.version.SAMP(GDGBASE) includes an example for defining a GDG base entry.

Example:

```
LOGSAVE SYSOUT=1
LOGSAVE DSN=HACC.BASE.GDG,UNIT=SYSDA,CYL=(020,010)
```

Saves to GDG files are only possible on installations using SMS.

3.34 MAXCOOR

MAX. NUMBER OF COORDINATES DEFINITION	(optional)
MAXCOOR=nnnnnn	

nnnnnn Maximum number of coordinates for an archive (Default: 40000)

MAXCOOR defines the maximum number of coordinates that are/can be defined for an archive.

This statement is only required for HAA, whereby the Archive cluster must be at least 50 cylinders when `MAXCOOR=120000` in combination with `MAXVOL=310000`. The TSO region size (HAA) and HCC-STC should be set to 8 MB. This roughly corresponds to an AML/2 system with 15 towers including the peripheral devices to be determined below.

MAXCOOR can be determined as follows:

number of slots in the towers and
number of slots in the racks and
number of slots in the E/I/F units
number of problem boxes
number of devices

Default: `MAXCOOR=40000`

Example: `MAXCOOR=25691`

3.35 MAXTSO

ABS OUTPUT BUFFER DEFINITION	(optional)
MAXTSO USERS=nn,BUFFN=mmm,LOC=location	

nn	Number of users to be configured	(02 - 99)
mmm	Number of entries per user (ABS/ISPF)	(001 - 999)
location	ABOVE/BELOW	

MAXTSO controls the allocation of a storage area in the CSA/ECSA (SP 241) to use the ISPF interface for ABBASEND. It depends on the LOC=ABOVE/BELOW subparameter.

The area size depends on the values specified for USERS and BUFFN.

One user buffer is reserved for the operator buffer and therefore at least USERS=2 must be specified.

A message is output during the initialization phase when the specified area is too large. This error does not cause an abort but has the following effects:

- the operator buffer is not written to
- the ABS/ISPF interface **cannot** be used

Default: `MAXTSO USERS=3,BUFFN=200,LOC=ABOVE`

Example: `MAXTSO USERS=5`

3.36 MAXVOL

MAX. NUMBER OF VOLSERS DEFINITION	(optional)
MAXVOL=nnnnn	

nnnnn Maximum number of volsers in an archive (Default: 40000)

MAXVOL specifies the maximum number of volsers that can be stored in an archive.

This statement is only required for HAA, whereby the Archive cluster must be at least 50 cylinders when `MAXCOOR=120000` in combination with `MAXVOL=310000`. The TSO region size (HAA) and HCC-STC should be set to 8 MB. This roughly corresponds to an AML/2 system with 15 towers including the peripheral devices.

Default: `MAXVOL=40000`

Example: `MAXVOL=31575`

3.37 MOEXIT

MOUNT EXIT	(optional)
MOEXIT=module-name	

module-name Load module name

Controls the user exit for cartridge loads.

The customer must create the user exit for the installation environment when necessary.

The mount exit receives control before each mount; a parameter list is transferred.

The module names should not start with the HLQs or with HAC or ZHC because these are reserved for the HCC modules.

The Appendix of the System Reference Guide contains further information under Modifying the User exit.

Default: None

Example: `MOEXIT=XYLMOD`

3.38 MSG=ARC*

AUTOMATIC MESSAGE REPLY	(optional)
MSG=ARC*,AUTOREPLY MSG=ARC*,NOAUTOREPLY	

AUTOREPLY	HCC answers a pending REPLY
NOAUTOREPLY	HCC ignores a pending REPLY

This statement handles the automatic replies for DF/HSM messages.

Default: `MSG=ARC*,NOAUTOREPLY`

Example: `MSG=ARC*,AUTOREPLY`

The following HSM messages are replied to with REPLY=‘Y’:
ARC0310A, ARC0311A, ARC0312A, ARC0314A and ARC0366A.

The following HSM messages are replied to with REPLY=‘WAIT:
ARC0380A and ARC0381A.

When an automated product such as NETVIEW or NETMASTER is installed, it should control the automatic message replying.
This function can be defined directly in HSM as from DF/HSM 2.6.0 whereby the following SETSYS parameters should be checked with regards to tape replies.

- INPUTTAPEALLOCATION(WAIT/NOWAIT)
- OUTPUTTAPEALLOCATION(WAIT/NOWAIT)
- RECYCLETAPEALLOCATION(WAIT/NOWAIT)
- TAPEINPUTPROMT
  [MIGRATIONTAPES(YES/NO)]
  [BACKUPTAPES(YES/NO)]
  [DUMPTAPES(YES/NO)]
- TAPEOUTPUTPROMT(TAPECOPY(YES/NO))

There are further parameters which also lead to replies but are not directly connected with tape processing (for example, SETSYS REQUEST/NOREQUEST). No claim is made that this list is complete or that the parameter syntax is correct. (Source: DF/HSM System Programmer’s Command Reference)

3.39 MSG=CBR2600A

AUTOMATIC MESSAGE REPLY	(optional)
MSG=CBR2600A,AUTOREPLY MSG=CBR2600A,NOAUTOREPLY	

AUTOREPLY	HCC answers a pending reply with the A-volser home coordinate from CBR2600A.
NOAUTOREPLY	HCC ignores a pending reply.

This statement determines whether a reply should be issued for CBR2600A (AUTOREPLY) or not (NOAUTOREPLY).

Default: `MSG=CBR2600A,NOAUTOREPLY`

Example: `MSG=CBR2600A,AUTOREPLY`

3.40 MSG=CBR4405D

AUTOMATIC MESSAGE REPLY	(optional)
MSG=CBR4405D,AUTOREPLY MSG=CBR4405D,NOAUTOREPLY	

NOAUTOREPLY	HCC ignores a pending reply
AUTOREPLY	HCC answers a pending reply with the A-volser of the loaded optical disk (OD).

This statement handles the automatic message reply for REPLY CBR4405D.

Default: `MSG=CBR4405D,NOAUTOREPLY`

Example: `MSG=CBR4405D,AUTOREPLY`

This statement must be set to AUTOREPLY when automatic optical disk initialization under HCC control is required.

3.41 MSG=CBR4406D

AUTOMATIC MESSAGE REPLY (optional)
MSG=CBR4406D,AUTOREPLY MSG=CBR4406D,NOAUTOREPLY

NOAUTOREPLY	HCC ignores a pending reply
AUTOREPLY	HCC answers a pending reply with the owner information.

This statement handles the automatic message reply for REPLY CBR4406D.

Owner information format:

```
HACC Hx ON CPUx
```

HACC	Constant
Hx	HCC ID from Start procedure
ON	Constant
CPUx	SMF-CPU ID

Example: `HACC H2 ON S500`

Default: `MSG=CBR4406D,NOAUTOREPLY`

Example: `MSG=CBR4406D,AUTOREPLY`

This statement must be set to AUTOREPLY when automatic optical disk initialization under HCC control is required.

3.42 MSG=CBR4423D

AUTOMATIC MESSAGE REPLY (optional)
MSG=CBR4423D,AUTOREPLY MSG=CBR4423D,NOAUTOREPLY

NOAUTOREPLY HCC ignores a pending reply

AUTOREPLY HCC answers a pending reply with the A-volser coordinate of the loaded optical disk (OD).

This statement handles the automatic message reply for REPLY CBR4423D.

Default: `MSG=CBR4423D,NOAUTOREPLY`

Example: `MSG=CBR4423D,AUTOREPLY`

This statement must be set to AUTOREPLY when automatic optical disk initialization under HCC control is required.

3.43 MSG=CBR4424D

AUTOMATIC MESSAGE REPLY (optional)
MSG=CBR4424D,AUTOREPLY MSG=CBR4424D,NOAUTOREPLY

NOAUTOREPLY HCC ignores a pending reply
AUTOREPLY HCC answers a pending reply with U (=USE)

This statement handles the automatic message reply for REPLY CBR4424D.

Default: `MSG=CBR4424D,NOAUTOREPLY`

Example: `MSG=CBR4424D,AUTOREPLY`

This statement must be set to AUTOREPLY when automatic optical disk initialization under HCC control is required.

3.44 MSG=CBR4426D

AUTOMATIC MESSAGE REPLY (optional)
MSG=CBR4426D,AUTOREPLY MSG=CBR4426D,NOAUTOREPLY

NOAUTOREPLY	HCC ignores a pending reply
AUTOREPLY	HCC answers a pending reply with C when this is allowed in the message. Otherwise the reply is ignored.

This statement determines whether a reply should be issued for CBR4426D (AUTOREPLY) or not (NOAUTOREPLY).

Default: `MSG=CBR4426D,NOAUTOREPLY`

Example: `MSG=CBR4426D,AUTOREPLY`

3.45 MSG=CBR4432D

AUTOMATIC MESSAGE REPLY (optional)
MSG=CBR4432D,AUTOREPLY MSG=CBR4432D,NOAUTOREPLY

NOAUTOREPLY	HCC ignores a pending reply
AUTOREPLY	HCC answers a pending reply with the corresponding Storage group.

This statement handles the automatic message reply for REPLY CBR4432D.

Default: `MSG=CBR4432D,NOAUTOREPLY`

Example: `MSG=CBR4432D,AUTOREPLY`

This statement must be set to AUTOREPLY when automatic optical disk initialization under HCC control is required.

The description of the HACCPARM statement STORGRP provides further information.

3.46 MSG=CBR4438D

AUTOMATIC MESSAGE REPLY (optional)
MSG=CBR4438D,AUTOREPLY MSG=CBR4438D,NOAUTOREPLY

NOAUTOREPLY	HCC ignores a pending reply
AUTOREPLY	HCC answers a pending reply with F (=FORMAT)

This statement handles the automatic message reply for reply CBR4438D.

Default: `MSG=CBR4438D,NOAUTOREPLY`

Example: `MSG=CBR4438D,AUTOREPLY`

This statement must be set to AUTOREPLY when automatic optical disk initialization under HCC control is required.

3.47 MSG=CBR4439D

AUTOMATIC MESSAGE REPLY (optional)
MSG=CBR4439D,AUTOREPLY MSG=CBR4439D,NOAUTOREPLY

NOAUTOREPLY	HCC ignores a pending reply
AUTOREPLY	HCC answers a pending reply with the B-volser of the loaded optical disk (OD)

This statement handles the automatic message reply for reply CBR4439D.

Default: `MSG=CBR4439D,NOAUTOREPLY`

Example: `MSG=CBR4439D,AUTOREPLY`

This statement must be set to AUTOREPLY when automatic optical disk initialization under HCC control is required.

3.48 MSG=IEC507D

AUTOMATIC MESSAGE REPLY	(optional)
MSG=IEC507D,NOAUTOREPLY MSG=IEC507D,REPLY=M MSG=IEC507D,REPLY=U	

NOAUTOREPLY	HCC ignores a pending REPLY
REPLY=M	HCC answers a pending REPLY with M (=UNLOAD)
REPLY=U	HCC answers a pending REPLY with U (=USE)

This statement handles the automatic message reply for reply IEC507D.

The IEC507D message appears when a program attempts to write to a data medium (VOLSER) which still holds a file for which the expiration date has not yet elapsed.

Refer to the IBM System Messages publication for further information.

Default: `MSG=IEC507D,NOAUTOREPLY`

Example: `MSG=IEC507D,REPLY=U`

When an automated product such as NETVIEW or NETMASTER is installed, it should control the automatic message replying.

NOAUTOREPLY must be specified or removed completely from the HACPARM1 when the Tape Device Allocation Manager TDAM is in use.

3.49 MSG=IEC510D

AUTOMATIC MESSAGE REPLY	(optional)
MSG=IEC510D,NOAUTOREPLY MSG=IEC510D,REPLY=F MSG=IEC510D,REPLY=U	

NOAUTOREPLY	HCC ignores a pending REPLY
REPLY=F	HCC answers a pending REPLY with F
REPLY=U	HCC answers a pending REPLY with U (=UNLOAD)

This statement handles the automatic message reply for REPLY IEC510D.

The IEC510D message appears when a program attempts to write to a tape without a 'FILE-PROTECT-RING'.

HCC recognizes two cases for REPLY=F and carries out the following actions:

1. Non-Scratch request:
   - Cartridge is ejected
   - Operator message - disable write protection
   - Cartridge insert with **VI** command
   - Normal processing continues

2. Scratch request:
   - Cartridge is ejected
   - Warning message to operator
   - New scratch cartridge assigned
   - Normal processing continues

Refer to the IBM System Messages publication for further information.

Default: `MSG=IEC510D,NOAUTOREPLY`

Example: `MSG=IEC510D,REPLY=U`

When an automated product such as NETVIEW or NETMASTER is installed,it should control the automatic message replying.

3.50 MSG=IEC512I

AUTOMATISCHE NACHRICHTENBEHANDLUNG	(optional)
MSG=IEC512I,AUTOEJECT MSG=IEC512I,NOAUTOEJECT	

NOAUTOEJECT	HCC does not generate an **EJECT** command
AUTOEJECT	HCC generates an **EJECT** command

This statement handles the automatic message reply `IEC512I LBL ERR unit ....`

Activating this function causes HCC to automatically generate an eject command for the volser currently loaded on the unit.

Default: `MSG=IEC512I,NOAUTOEJECT`

Example: `MSG=IEC512I,AUTOEJECT`

This function is only active for secondary HCC systems when the function is also active on the respective primary HCC system.

3.51 MSG=IEC534D

AUTOMATIC MESSAGE REPLY (optional)
MSG=IEC534D,NOAUTOREPLY MSG=IEC534D,REPLY=M MSG=IEC534D,REPLY=U

NOAUTOREPLY	HCC ignores a pending REPLY
REPLY=M	HCC answers a pending REPLY with M (=UNLOAD)
REPLY=U	HCC answers a pending REPLY for foreign mount entries with U (=USE)

This statement handles the automatic message reply for REPLY IEC534D.

The IEC534D message appears when the header label does not match the JCL label parameter.

REPLY=U	The current label is only overwritten when the tape in question is a volser defined as foreign mount entry otherwise this reply input is ignored.
REPLY=M	The loaded tape is rejected and a new tape requested.

Refer to the IBM System Messages publication for further information.

Default: `MSG=IEC534D,NOAUTOREPLY`

Example: `MSG=IEC534D,REPLY=U`

When an automated product such as NETVIEW or NETMASTER is installed, it should control the automatic message replying.

3.52 MSG=IEC701D and/or EPT166A

AUTOMATIC MESSAGE REPLY	(optional)
MSG=IEC701D,NOAUTOREPLY MSG=IEC701D,REPLY=M	

NOAUTOREPLY	HCC ignores a pending REPLY
REPLY=M	HCC answers a pending REPLY with M (=USE)

This statement handles the automatic message reply for REPLY IEC701D and/or EPT166A whereby the Reply-Ids ‘S’ and ‘U‘ are not supported for EPIC. The IEC701D message appears when a label should be written to the tape.

The EPT166A message appears when a label should be written to the tape using EPIC/MVS.

Refer to the IBM System Messages publication or the EPIC manuals from GOAL Systems for further information.

Default: `MSG=IEC701D,NOAUTOREPLY`

Example: `MSG=IEC701D,REPLY=M`

When an automated product such as NETVIEW or NETMASTER is installed, it should control the automatic message replying.

Unexpected errors can occur when the DD statement //TAPE of the existing IEHINITT label initialization job control DCB subparameter has **no** UNIT= (.....,,DEFER).

An IEF233A mount is always generated for the first cartridge requested by MVS in such a case.

3.53 MSG=IECTMS7

AUTOMATIC MESSAGE REPLY	(optional)
MSG=IECTMS7,PROCESS MSG=IECTMS7,IGNORE	

PROCESS	HCC processes this message
IGNORE	HCC does not react to this message

This statement controls how the Checkpoint Restart message CA-1 is processed. When IECTMS7 processing is activated, the non-specific mount in the sequential IEC501A message is converted to a specific mount (with the volser from the IECTMS7 message) providing the same unit and job name are involved.

Each conversion only applies to one unit, for example, the first IECTMS7 message is not considered when a second IECTMS7 message is created for a second unit before the sequential IEC501A message for the first IECTMS7 message has been generated.

Default: `MSG=IECTMS7,IGNORE`

Example: `MSG=IECTMS7,PROCESS`

This statement should only be activated when CA-1 is being used as the tape management system.

3.54 MSG=IEF238D

AUTOMATIC MESSAGE REPLY	(optional)
MSG=IEF238D,AUTOREPLY MSG=IEF238D,NOAUTOREPLY	

AUTOREPLY	HCC answers a pending REPLY
NOAUTOREPLY	HCC ignores a pending REPLY

This statement handles the automatic message reply for REPLY IEF238D.

The IEF238D message appears when the system cannot reserve sufficient units for the current job step.

Two cases are possible for AUTOREPLY:

1. REPLY with device name
   when a selection list of OFFLINE units (IEF247I/IEF290E/STM202I) managed by AML/HCC is provided in the MESSAGE sequence, the REPLY is answered with the first unit found.

2. REPLY with WAIT
   the REPLY is answered with WAIT when no selection list is provided.
   (The IEF433D message then appears)

Refer to the IBM System Messages publication for further information.

Default: `MSG=IEF238D,NOAUTOREPLY`

Example: `MSG=IEF238D,AUTOREPLY`

When an automated product such as NETVIEW or NETMASTER is installed, it should control the automatic message replying.

NOAUTOREPLY must be specified or removed completely from the HACPARM1 when the Tape Device Allocation Manager TDAM is in use.

3.55 MSG=IEF433D

AUTOMATIC MESSAGE REPLY	(optional)
MSG=IEF433D,NOAUTOREPLY MSG=IEF433D,REPLY=HOLD MSG=IEF433D,REPLY=NOHOLD	

NOAUTOREPLY	HCC ignores a pending REPLY
REPLY=HOLD	HCC answers a pending REPLY with HOLD
REPLY=NOHOLD	HCC answers a pending REPLY with NOHOLD

This statement handles the automatic message reply for REPLY IEF433D.

The IEF433D message appears as a follow-up message to REPLY IEF238D when this was answered with WAIT.

Refer to the IBM System Messages publication for further information.

Default: `MSG=IEF433D,NOAUTOREPLY`

Example: `MSG=IEF433D,REPLY=HOLD`

When an automated product such as NETVIEW or NETMASTER is installed, it should control the automatic message replying.

3.56 MSGAMU

REACTING TO AMU MESSAGES (optional)

```
MSGAMU REQU=Rnnn,CMD='cmd'[,SYS=s,ROB=r]
MSGAMU REQU=Rnnn,OPMSG='msg'[,SYS=s,ROB=r]
```

Rnnn	AMU request/status	
	R000	Robot not ready
	R001	Robot ready
	R002	ROSO will be requested afterwards
	R010	ROSO request
	R1nn	Door nn has been opened (nn = 01 to 99)
cmd	Any HCC command (maximum 60 characters)	
msg	Any message output as an operator message. (maximum 60 characters)	
s	System reacting to the AMU message	
r	Robot number, only in connection with a specified system	

MSGAMU serves to react to asynchronous AMU messages. Several actions can be defined for the respective message.

This statement is required to be able to service a High Capacity Device (HICAP). Door opening must be requested by an operator element. The AMU then sends a ROBS asynchronous message with R002 to the HCC requesting the robot stop. A further REQU message with R010 demands the robot stop.

This can now be controlled using the MSGAMU statement (operator message or HCC command). The same applies when closing the door again, an action such as an automatic ROSA should also be triggered here.

The AMU uses the ROBS message with R001 as information, an automatic ROSA could now follow, control by MSGAMU. A STAT message and the R1nn request specify which HICAP device was affected with nn being the number of the opened door. An action controlled by MSGAMU can now follow, for example, an insert using this door.

Default: None

Examples:

```
MSGAMU REQU=R002,OPMSG='Open HIGHCAP requested',SYS=1,ROB=2
MSGAMU REQU=R010,OPMSG='ROSA requested'
MSGAMU REQU=R010,CMD='ROSA 1,2'
MSGAMU REQU=R101,OPMSG='Automatic VI I01 completed'
MSGAMU REQU=R101,CMD='VI I01'
```

Then action applies to all systems when the SYS= and ROB= parameters are omitted.

3.57 MSGEXIT

MESSAGE EXIT	(optional)
MSGEXIT=modulename	

module-name Load module name

This parameter controls the user exit for MVS messages.

The customer must provide the user exit.

MSGEXIT gains control before an MVS message is processed.

Register 1 transfers a parameter list with the following information:

<W1>	Pointer to MVS message	(maximum 216 chars.) [1]
<W2>	Pointer to job name	(maximum 8 chars.)
<W3>	Pointer to sender CPU ID	(maximum 4 chars.)

Register 15 must contain one of the following return codes when the exit returns:

0	=	ok	No changes	No message
4	=	ok	Changes made	Message HAC371I
8	=	nok	Error	Message HAC430I
12	=	ok	Changes made	No message

The MSGEXIT module must be reusable.

The module name is freely selectable.

Default: None

Example: `MSGEXIT=XYLMOD`

[1] Refer to the System Reference Guide for HACC/MVS 3.0., Section MSG Exit Parameter list

3.58 MSGPREFIX

DEFINING THE MESSAGE PREFIX	(optional)
MSGPREFIX=ppp	

ppp	Message prefix	1st character = alphabetic character 2nd and 3rd characters = alphanumeric characters

This parameter defines a message prefix. The message identification has the format pppnnna:

ppp	= Message prefix
nnn	= Message number
a	= Action designator

Default: `MSGPREFIX=HAC`

Example: `MSGPREFIX=H24`

The default prefix (HAC) is used for start messages until the HACPARM1 initialization is finished.

3.59 ODSCR

INFORMATIONEN ON OPTICAL DISK	(optional)
ODSCR TYPE=SEQ,DSN=file-name	

SEQ	Sequential input file
file-name	Input file name

This parameter describes the procedure and input file to gain information on optical disks with FREESPACE.

The volser of either the A or B side can be entered.

Default: None

Example: `ODSCR TYPE=SEQ,DSN=HACC.DB2.OD#FSPC`

This parameter is only valid for optical disks (OD).

3.60 PDSNARCH

FILE NAME FOR ARCHIVE (PRODUCTION)	(mandatory)
PDSNARCH=file-name	

file-name Name of the HCC Archive mirror (cluster name).

This parameter names the HCC Archive mirror.

The HCC Archive mirror is a KSDS VSAM file.

Refer to the HCC Work Files Section for further information.

Default: None

Example: `PDSNARCH=hlq.HACCARCH`

3.61 PDSNEXCn

FILE NAME FOR EXCHANGE LOG (PRODUCTION)	(optional)
PDSNEXCn=file-name[,RECNO=xxxx][,STATUS=ccccc]	

n	1-Z (1, 2, ..., 9, A,...,Z)		
file-name	Name of the HCC Exchange log		
xxxx	Record count		(Default = 300)
ccccc	ACT =	Exchange log is activated	(Default)
	INACT =	Exchange log is not activated	

This parameter names the HCC Exchange log.

The HCC Exchange log is a BDAM file. Every secondary HCC must be connected to a primary HCC using SHARED DASD.

The '**VARY ACT/INACT**' command can be used to activate/deactivate the Exchange log at any time.

Refer to the HCC Work Files Section for further information.

Default: `PDSNEXCn=file-name,RECNO=300,STATUS=ACT`

Example:
```
PDSNEXC1=hlq.HACCEXC1,RECNO=500,STATUS=INACT
PDSNEXC2=hlq.HACCEXC2
```

The allocation must be checked when RECNO in the HACCPARM is modified for an existing file.

FEX=(n,...,n,n-n) (format EXC.LOG) must be specified in the start procedure for a HCC restart when the EXCHANGE LOG is recreated. FEX=(n,...,n-n) must then be set.

3.62 PDSNMLGn

FILE NAME FOR MESSAGE LOG (PRODUCTION)	(optional)
PDSNMLGn=file-name	

n 1-4
file-name Name of the HCC Message log

This parameter names the HCC Message log.

The HCC Message log is a BSAM file.

Refer to the HCC Work Files Section for further information.

Default: None

Example:
```
PDSNMLG1=OBIS.HACCMLG1
PDSNMLG2=OBIS.HACCMLG2
```

4 MSG-LOGs should be used to ensure that the relative LOG is not overwritten in an error situation.

3.63 PDSNSTMS

FILE NAME FOR SCRATCH TAPE INPUT (PRODUCTION) (optional)
PDSNSTMS=file-name

file-name Name of the HCC input file defining scratch tapes

This parameter names the input file containing the scratch tape information. This can be the catalog of a tape management system or a sequential file.

Refer to the SCRATCH TAPE MANAGEMENT Section of the System Reference Guide for further information.

When the standard user exit for the tape management system CONTROL-T (TMS=CNTT,...) is used, the file name is automatically extended with the LOW-LEVEL-QUALIFIER

.MDBD
.MDBI
.TRC

and need not be explicitly specified here.

Default: None

Example: `PDSNSTMS=CA1.CATALOG`

3.64 PDSNULOG

FILE NAME FOR UNIT RECOVERY LOG (PRODUCTION) (mandatory)
PDSNULOG=file-name

file-name Name of the HCC Unit recovery log

This parameter names the HCC Unit recovery log.

The HCC Unit recovery log is a BDAM file..

Refer to the HCC Work Files Section for further information.

Default: None

Example: `PDSNULOG=hlq.HACCULOG`

3.65 PRTY EJ

BASIC PRIORITY FOR EJECT TASK	(optional)
PRTY EJ=nn	

nn Valid range 01-80

The PRTY EJ statement supports individual priority control for EJECT tasks.

This value can be modified dynamically with the **SET PRTY** command (valid until HCC Stop).

The priority for tasks in the wait queue is changed according to the HCC internal dispatching algorithms.

Default: `PRTY EJ=20`

Example: `PRTY EJ=35`

3.66 PRTY JOB

BASIC-PRIORITY FOR MOUNT/KEEP USING JOB-NAME (optional)
PRTY JOB=jobname,INCR=ii,G

jobname	Valid job name	
ii	Absolute value for MOUNT and KEEP	(01-80)
	Relative value for MOUNT and KEEP	
G	Generic job name	(Default = not generic)

The PRTY JOB statement supports individual priority control for MOUNT/KEEP tasks using job names.

This value can be modified dynamically with the **SET PRTY** command (valid until HCC Stop).

The relative value for MOUNT/KEEP is added to the current valid basic priority. A PRTY statement with relative values must remain within the limits (01-80).

An absolute value overwrites the current basic priority.

The priority for tasks in the wait queue is changed according to the HCC internal dispatching algorithms.

Default: None

Examples:

```
PRTY JOB=HSM,INCR=+5
PRTY JOB=J04711,INCR=25
PRTY JOB=COM0099,INCR=-7
PRTY JOB=JOBA,INCR=10,G
```

3.67 PRTY KE

BASIC PRIORITY FOR KEEP TASK	(optional)
PRTY KE=nn	

nn Valid range 01-80

PRTY KE supports individual priority control for KEEP tasks.

This value can be modified dynamically with the **SET PRTY** command (valid until HCC Stop).

The priority for tasks in the wait queue is changed according to the HCC internal dispatching algorithms.

Default: `PRTY KE=30`

Example: `PRTY KE=35`

The MO/KE priorities must be "tuned" to attain balanced mount/keep processing on AML systems with different HOST complexes.

Recommended:	MAJOR-HCC:	`PRTY MO=35` `PRTY KE=31`
	MINOR-HCC:	`PRTY MO=40` `PRTY KE=36`

3.68 PRTY MO

BASIC PRIORITY FOR MOUNT TASK	(optional)
PRTY MO=nn	

nn Valid range 01-80

PRTY MO supports individual priority control for MOUNT tasks.

Commands for the IBM 3995 - Jukebox (LJB, UJB and Flip) also use the specified priority as basic priority.

This value can be modified dynamically with the **SET PRTY** command (valid until HCC Stop).

The priority for tasks in the wait queue is changed according to the HCC internal dispatching algorithms.

Default: `PRTY MO=35`

Example: `PRTY MO=40`

The MO/KE priorities must be "tuned" to attain balanced MOUNT/KEEP processing on AML systems with different HOST complexes.

Recommended:

MAJOR-HCC:
```
PRTY MO=35
PRTY KE=31
```

MINOR-HCC:
```
PRTY MO=40
PRTY KE=36
```

3.69 PRTY MV

BASIC PRIORITY FOR MOVE TASK	(optional)
PRTY MV=nn	

nn Valid range 00-80

PRTY MV supports individual priority control for MOVE tasks.

This value can be modified dynamically with the **SET PRTY** command (valid until HCC Stop).

The priority for tasks in the wait queue is changed according to the HCC internal dispatching algorithms.

Default: `PRTY MV=10`

Example: `PRTY MV=07`

3.70 PRTY SCH

BASIC PRIORITY FOR SEARCH TASK	(optional)
PRTY SCH=nn	

nn Valid range 00-80

PRTY SCH supports individual priority control for SEARCH tasks within the **VI** insert command.

This value can be modified dynamically with the **SET PRTY** command (valid until HCC Stop).

The priority for tasks in the wait queue is changed according to the HCC internal dispatching algorithms.

Default: `PRTY SCH=30`

Example: `PRTY SCH=35`

3.71 PRTY VI

BASIC PRIORITY FOR VOLUME INSERT TASK	(optional)
PRTY VI=nn	

nn Valid range 00-80

PRTY VI supports individual priority control for VOLUME INSERT tasks.

This value can be modified dynamically with the **SET PRTY** command (valid until HCC Stop).

The priority for tasks in the wait queue is changed according to the HCC internal dispatching algorithms.

Default: `PRTY VI=20`

Example: `PRTY VI=05`

3.72 ROUTCD

ROUTING CODE FOR CONSOLE MESSAGES	(optional)
ROUTCD=nn,mm,...	

nn,mm 1-16

ROUTCD defines routing codes for HCC console messages.

Routing codes 17 - 128 are not supported at present.

Default: `ROUTCD=1,11`

Example: `ROUTCD=2,7,11`

3.73 SECURITY

INTERNAL / EXTERNAL ACCESS AUTHORIZATION (optional)

```
SECURITY TYPE=HAA,USERID=uid,ACCESS=UPDATE|READ[,HLQ=ind]
SECURITY TYPE=ABS,USERID=uid,ACCESS=ALL|'cmd'
SECURITY TYPE=ISP,USERID=uid,ACCESS=ALL|'cmd'
SECURITY TYPE=EXT,NAME=name,CLASS=class,RESPREF=rpn,HLQHAA=ind
```

TYPE=	HAA	Authorization for HCC Archive Administration
	ABS	Authorization for ABBASEND
	ISP	Authorization for the ISPF Operator interface
	EXT	Authorizations through an external security system such as RACF, Top Secret and other systems that can be accessed with SAF.
USERID=	uid	TSO User ID, generic allowed, for example, OBI1 instead of OBI1KF1
ACCESS=	UPD	Update with HAA allowed
	READ	Read for HAA allowed
	ALL	All HCC commands allowed (default)
	cmd	Restriction to certain HCC commands within the sub-parameter TYPE.
NAME=	name	Name of the external system
	RACF	RACF
	TOPS	Top secret
CLASS=	class	Resource class (required for NAME=RACF)
RESPREF=	rnp	Resource name prefix (required for NAME=RACF)
HLQ=	ind	High level qualifier for files created by HAA.
HLQHAA=	ind	High level qualifier for files created by HAA. The User ID is the default for ind

This statement serves to assign general external and internal access authorizations or for single commands. Certain preconditions described in detail in the System Reference Guide, Command Authorization Section, must be satisfied for TYPE=EXT.

Only UPD(ate) or READ are allowed for TYPE=HAA and refer to the HCC Archive Administration.

A general authorization for all HCC commands can be granted for TYPE=ABS and ISP, but can also be restricted to certain single commands. Several SECURITY statements can be effective at the same time.

The external SECURITY is searched for first and then the SECURITY statement valid for the function. The ABS, ISPF and HAA functions cannot be used without SECURITY statements.

The **END** command is automatically authorized for ABBASEND MONITOR so that the MONITOR session can be terminated.

At least RACF Release 1.9 must be in use.

Default: None

Example:

```
SECURITY TYPE=ABS,USERID=OBI1,ACCESS='DISPLAY'

SECURITY TYPE=ISP,USERID=OBI2,ACCESS=ALL

SECURITY TYPE=HAA,USERID=OBI1KF1,ACCESS=UPD,HLQ=HACC

SECURITY TYPE=EXT,
          NAME=RACF,CLASS=$HACC,RESPREF=$HACC.CMD
```

3.74 SENDEXIT

SENDE-EXIT	(optional)
SENDEXIT=modulename	

module-name Load module name

This parameter controls the User exit for communication protocols to the AMU.

The customer is responsible for the User exit itself.

SENDEXIT receives control before the protocol is sent to the AMU.

Register 1 transfers a parameter list with the following information:

<W1> Pointer to protocol
<W2> Pointer to data queue
<W3> Pointer to job name (maximum 8 chars.)

Register 15 must contain one of the following return codes when the exit returns:

0	=	ok	No changes	No message
4	=	ok	Changes made	Message HAC371I
8	=	nok	Error	Message HAC430I
12	=	ok	Changes made	No message

The SENDEXIT module must be reusable.

The module name is freely selectable.

Default: None

Example: `SENDEXIT=XYLMOD`

3.75 SMFRECORD

WRITE SMF	(optional)
SMFRECORD=nnn	

nnn 128-255

This parameter enables writing SMF records in HCC.

Replace nnn with a record type between 128 and 255. SMF provides these record types for USER-WRITTEN RECORDs. Each installation must define its own record types.

The SMF RECORDING Section of the System Reference Guide describes the structure for the individual record subtypes as well as details on the processes involved.

Default: None

Example: `SMFRECORD=192`

3.76 SSINAME

SUBSYSTEM NAME	(optional)
SSINAME=xxxx	

x Any valid character

This parameter defines the subsystem names used by the HCC started task. This name must match the subsystem name entered in IEFSSNxx in the SYS1.PARMLIB for installation. Refer to the Installation Section in the Installation and Customization Guide.

The subsystem name should be different to the name of the HCC started task.

When the SSI name (IEFSSNxx) and the name of the started task are identical, the subsystem is started under MSTR (Master) and not under the primary subsystem (JES).

Default: `SSINAME=HAC0`

Example: `SSINAME=HACP`

The subsystem name should be defined on every host as HAC0. Different subsystem names allow several HCCs to be active on one host.

3.77 STAM

COOPERATION WITH STAM / MIM	(optional)
STAM=YES|NO	

YES	Enabled
NO	Disabled

This parameter defines whether the software product STAM[1)] is installed in the HCC environment.

STAM modifies the MVS messages IEF247I or IEF290E. This parameter must be specified when an automatic reply is required for the IEF238D message.

Default: `STAM=NO`

Example: `STAM=YES`

Refer to MSG=IEF238D,AUTOREPLY

3.78 STATISTICS

ROBOT STATISTICS	(optional)
STATISTICS=YES|NO	

YES	Enabled
NO	Disabled

STATISTICS=YES enables counting robot actions and the time required for robot actions.

The **D[ISPLAY] ACTIVITY** command (refer to the Operator Manual) displays the number of actions and time statistics per system and robot.

Default: `STATISTICS=NO`

Example: `STATISTICS=YES`

3.79 STIMER

TIMER INTERRUPT FOR EXCHANGE LOG	(optional)
STIMER=nn	

nn Interval in seconds

This parameter sets the interval in which the primary HCC in a loosely coupled CPU environment (SHARED DASD) processes information from secondary HCC systems.

STIMER should not be defined when no secondary HCC systems are present.

Default: `STIMER=05`

Example: `STIMER=02`

In this case, the primary HCC checks every 2 seconds for information from secondary HCCs. The I/O activity is just 1 BDAM READ and 1 BDAM WRITE when no information is available.

3.80 STORGRP

ASSIGNING VOLSER MASKS TO STORAGE GROUPS (optional)

STORGRP NAME=name,VOL=(volser1,volser2,...)

name Storage group name (max. 8 characters)
volserx Volser masks to be assigned to a Storage group. The names can be masked with % or * in the usual manner. Max. 32 volser masks can be specified per statement.

STORGRP serves to assign volser ranges to a Storage group. This assignment is required to support automatic optical disk initialization. A unique assignment is also required to support executing scratch mounts for a particular Storage group.

The statement sequence is followed.

The highest qualification level must be defined first (for example, fully qualified volser).

Example: Existing volser ranges and required assignment to Storage groups:

Volser total:		OD001A/B - OD144A/B
		OD200A/B - OD344A/B
Name: STG001	Volsers:	OD001A/B - OD002A/B
Name: STG002	Volsers:	OD003A/B - OD009A/B
		OD100A/B - OD144A/B
Name: STG003	Volsers:	OD010A/B - OD049A/B
Name: STG004	Volsers:	OD050A/B - OD099A/B
Name: STG005	Volsers:	All other volsers
		OD200A/B - OD344A/B

The following STORGRP statements result:

```
STORGRP NAME=STG001,VOL=(OD001*,OD002*)
STORGRP NAME=STG002,VOL=(OD00*,OD1*)
STORGRP NAME=STG003,VOL=(OD01*,OD02*,OD03*,OD04*)
STORGRP NAME=STG004,VOL=(OD0*)
STORGRP NAME=STG005,VOL=(*)
```

3.81 SWAPLIM

MAX. NUMBER OF TAPE SWAPS	(optional)
SWAPLIM=n SWAPLIM=NONE	

n	Max. number of swaps per tape unit (0-2)
NONE	No reply from HCC

SWAPLIM controls SWAP events on cartridge stations in connection with MVS IGF5... messages.

HCC replies to the corresponding WTORs with "YES" n times for SWAPLIM=n and replies to the pending SWAP request with "NO" when this limit is exceeded.

HCC gives **no** reply for SWAPLIM=NONE.

Every SWAP event is recorded in the HCC Unit recovery log for the unit involved and in the HCC Archive mirror for the cartridge involved.

Default: `SWAPLIM=0`

Example: `SWAPLIM=1`

3.82 SYSDEFn

AML CONFIGURATION	(mandatory)
SYSDEFn=r1[,r2][,ABBA/x]	

n		AML system number 1 or 2	
r1		Robot 1	
r2		Robot 2	(optional)
x	= 1	ABBA/1	
x	= 2	AML/2	(default)
x	= E	AML/E	
x	= J	AML/J	

SYSDEFn defines the number of independent AML systems that can be serviced by a PRIMARY HCC SYSTEM.

Each AML system can have 1 or 2 robots.

Example:

```
SYSDEF1=1,2
SYSDEF2=1,ABBA/E
```

This installation comprises 2 AML systems, system 1 is a twin AML (AML/2), system 2 is a single AML (AML/E).

3.83 TLIPW

PASSWORD FOR TAPE LABEL INITIALIZATION	(optional)

```
TLIPW=NOPW
TLIPW=password
TLIPW=U
```

NOPW	Password check disabled
password	Character string as password
U	Preset password

This parameter controls the password check when starting tape label initialization (by HCC).

A password should be checked before tape label initialization for security reasons.

The password check is omitted when "NOPW" is the specific password.

Default: `TLIPW=U`

Example: `TLIPW=OBIS`

3.84 TMS=CNTT

TMS STANDARD EXIT FOR CONTROL T 2.1	(optional)
TMS=CNTT,fromvol,tovol[,nnnnn]	

CNTT Exit for scratch tape selection using CONTROL-T

fromvol	Lowest VOLSER number
tovol	Highest VOLSER number whereby fromvol to tovol must be in ascending sequence (alphanumeric as well).
nnnnn	maximum. number of selectable scratch tapes (Default = 3000)

This parameter controls the exit for scratch tape selection using CONTROL-T from 4th Dimension Software Ltd.

A standard exit is available for the CONTROL-T tape management system. PDSNSTMS identifies the CONTROL-T catalog which is appended with the LOW-LEVEL-QUALIFIER .MDBD, .MDBI, .TRC that must not then be input in PDSNSTMS. The ZHCN2500 program is called when a HCC **FREEVOL** command is executed. In this case, the CONTROL-T Load library must be in the LINK-LST or concatenated as STEPLIB with the HCC Load library, and the final link as defined in the LNKCTTEX member of the hlq.ZHC300.SAMP library executed.

The fromvol, tovol suboperands define the range for the volser to be selected and nnnnn defines the maximum number of scratch volsers to be selected..

The TMSEXIT and TMS=xxxx statements are mutually exclusive; only one of them can be defined.

Refer to the SCRATCH TAPE PROCESSING and USER EXITs Sections in the System Reference Guide for further information. For CONTROL-T 1.2.2, the sample exit X01CNTT1 must be converted with the relative Maclib.

Default: `TMS=CNTT,volser,volser,3000`

Example: `TMS=CNTT,T00001,T20000,5000`

Only one VOLSER range can be defined; use TMSEXIT when using several ranges.

Use the TMSEXIT statement as well when several input files are to be processed.

3.85 TMS=EPIC

TMS STANDARD EXIT FOR EPIC	(optional)
TMS=EPIC,fromvol,tovol[,nnnnn]	

EPIC Exit for scratch tape selection using EPIC/MVS

fromvol	Lowest VOLSER number
tovol	Highest VOLSER number whereby fromvol to tovol must be in ascending sequence (alphanumeric as well).
nnnnn	Maximum number of selectable scratch tapes (Default = 3000)

This parameter controls the exit for scratch tape selection using EPIC/MVS from GOAL SYSTEMS.

A standard exit is available for the EPIC tape management system. PDSNSTMS identifies the EPIC catalog.

The ZHCE250 program is called when a HCC **FREEVOL** command is executed.

The fromvol, tovol suboperands define the range for the volser to be selected and nnnnn defines the maximum number of scratch volsers to be selected.

The TMSEXIT and TMS=xxxx statements are mutually exclusive; only one of them can be defined.

Refer to the SCRATCH TAPE PROCESSING and USER EXITs Sections in the System Reference Guide for further information.

Default: `TMS=EPIC,volser,volser,3000`

Example: `TMS=EPIC,T00001,T20000,5000`

Only one VOLSER range can be defined; use TMSEXIT when using several ranges.

Use the TMSEXIT statement as well when several input files are to be processed.

3.86 TMS=RMM1

TMS STANDARD EXIT FOR DFSMSrmm (TM) Version 1 (optional)
TMS=RMM1,fromvol,tovol[,nnnnn]

RMM1 Planned exit for scratch tape selection using DFSMSrmm (TM) Version 1

fromvol	Lowest VOLSER number
tovol	Highest VOLSER number whereby fromvol to tovol must be in ascending sequence (alphanumeric as well).
nnnnn	Maximum number of selectable scratch tapes (Default = 3000)

There is **no** standard exit available for the DFSMSrmm (TM) Version 1 tape management system **at the present time**. PDSNSTMS identifies the DFSMSrmm catalog

DFSMSrmm (TM) Version 1 has no user exits which allow direct on-line access to the RMM catalog. The user must create a SCRATCH list using a **RMM** command under TSO which can then be processed by the FREEVOL exit. The relative **RMM** command is:

```
SEARCHVOLUME VOLUME(*) STATUS(SCRATCH) CLIST
```

The hlq.ZHC....SAMP library contains the exact DFSMSrmm file syntax.

Refer also to Section 9.28 of DFSMS/MVS VERSION 1 RELEASE 1, Using DFSMSrmm (SC26-4931-00)

Contact EMASS/GRAU STORAGE SYSTEMS for further details before using DFSMS rmm Version 1.

3.87 TMS=SEQF

TMS STANDARD EXIT FOR SEQ. FILE	(optional)
TMS=SEQF,fromvol,tovol[,nnnnn]	

SEQF Exit for scratch tape selection using a sequential file

fromvol	Lowest VOLSER number
tovol	Highest VOLSER number whereby fromvol to tovol must be in ascending sequence (alphanumeric as well).
nnnnn	Maximum number of selectable scratch tapes (Default = 3000)

This parameter controls the exit for scratch tape selection using a sequential file. PDSNSTMS identifies a sequential file. This file can be created with an individual method, for example, "List to disk".

DCB:	LRECL	optional
	RECFM	FB

Format: Byte 1-6: Volser

The ZHCS2500 program is called when a HCC **FREEVOL** command is executed. This method is also used, as described for TMS=RMM1, by the IBM tape management system DFSMSrmm (TM) Version 1. The fromvol, tovol suboperands define the range for the volser to be selected and nnnnn defines the maximum number of scratch volsers to be selected.

The TMSEXIT and TMS=xxxx statements are mutually exclusive; only one of them can be defined.

Refer to the SCRATCH TAPE PROCESSING and USER EXITs Sections in the System Reference Guide for further information

Default `TMS=SEQF,volser,volser,3000`

Example: `TMS=SEQF,T00001,T20000,5000`

Only one VOLSER range can be defined; use TMSEXIT when using several ranges. Use the TMSEXIT statement as well when several input files are to be processed.

When the SCRATCH volsers are provided in a SEQ. file instead of using TMS, this file must always include the current SCRATCH volsers, for example, the contents of a SEQ. file processed once by FREEVOL should be purged afterwards.

3.88 TMS=TLMS

TMS STANDARD EXIT FOR CA DYNAM/TLMS Rel.5 and 5.4 (optional)
TMS=TLMS,fromvol,tovol[,nnnnn]

TLMS Exit for scratch tape selection using TLMS

fromvol	Lowest VOLSER number
tovol	Highest VOLSER number whereby fromvol to tovol must be in ascending sequence (alphanumeric as well).
nnnnn	Maximum number of selectable scratch tapes (Default = 3000)

This parameter controls the exit for scratch tape selection using TLMS.

A standard exit is available for the TLMS tape management system. PDSNSTMS identifies the TLMS catalog.

The ZHCT2500 program is called when a HCC FREEVOL command is executed.

The fromvol, tovol suboperands define the range for the volser to be selected and nnnnn defines the maximum number of scratch volsers to be selected.

The TMSEXIT and TMS=xxxx statements are mutually exclusive; only one of them can be defined.

Refer to the SCRATCH TAPE PROCESSING and USER EXITs Sections in the System Reference Guide for further information.

Default: `TMS=TLMS,volser,volser,3000`

Example: `TMS=TLMS,T00001,T20000,5000`

Only one VOLSER range can be defined; use TMSEXIT when using several ranges.

Use the TMSEXIT statement as well when several input files are to be processed.

3.89 TMS=UCC1

TMS STANDARD EXIT FOR CA1 R 4.9	(optional)
TMS=UCC1,fromvol,tovol[,nnnnn]	

UCC1 Exit for scratch tape selection using CA1 R 4.9 or before

fromvol	Lowest VOLSER number
tovol	Highest VOLSER number whereby fromvol to tovol must be in ascending sequence (alphanumeric as well).
nnnnn	Maximum number of selectable scratch tapes (Default = 3000)

This parameter controls the exit for scratch tape selection using CA1 / UCC1.

A standard exit is available for the CA1 tape management system. PDSNSTMS identifies the CA1 catalog.

The ZHCU2500 program is called when a HCC **FREEVOL** command is executed.

The fromvol, tovol suboperands define the range for the volser to be selected and nnnnn defines the maximum number of scratch volsers to be selected.

The TMSEXIT and TMS=xxxx statements are mutually exclusive; only one of them can be defined.

Refer to the SCRATCH TAPE PROCESSING and USER EXITs Sections in the System Reference Guide for further information.

Default: `TMS=UCC1,volser,volser,3000`

Example: `TMS=UCC1,T00001,T20000,5000`

Only one VOLSER range can be defined; use TMSEXIT when using several ranges.

Use the TMSEXIT statement as well when several input files are to be processed.

3.90 TMS=UCV5

TMS STANDARD EXIT FOR CA1 R 5.0 and R 5.1 (optional)
TMS=UCV5,fromvol,tovol[,nnnnn]

UCV5 Exit for scratch tape selection using CA1 R 5.0 or after

fromvol	Lowest VOLSER number
tovol	Highest VOLSER number whereby fromvol to tovol must be in ascending sequence (alphanumeric as well).
nnnnn	Maximum number of selectable scratch tapes (Default = 3000)

This parameter controls the exit for scratch tape selection using CA1 / UCC1.

A standard exit is available for the CA1 tape management system. PDSNSTMS identifies the CA1 catalog.

The ZHCC2500 program is called when a HCC **FREEVOL** command is executed.

The fromvol, tovol suboperands define the range for the volser to be selected and nnnnn defines the maximum number of scratch volsers to be selected.

The TMSEXIT and TMS=xxxx statements are mutually exclusive; only one of them can be defined.

Refer to the SCRATCH TAPE PROCESSING and USER EXITs Sections in the System Reference Guide for further information.

Default: `TMS=UCV5,volser,volser,3000`

Example: `TMS=UCV5,T00001,T20000,5000`

Only one VOLSER range contiguous for all SCRATCH groups determined with VOLGR can be defined. Use TMSEXIT when using several ranges.

Use the TMSEXIT statement as well when several input files are to be processed.

3.91 TMS=ZARA

TMS STANDARD EXIT FOR ZARA (Version 1.1 + 1.2) (optional)
TMS=ZARA,fromvol,tovol[,nnnnn][,SSI=xxxx]

ZARA Exit for scratch tape selection using ZARA.

fromvol	Lowest VOLSER number
tovol	Highest VOLSER number whereby fromvol to tovol must be in ascending sequence (alphanumeric as well).
nnnnn	Maximum number of selectable scratch tapes (Default = 3000)
xxxx	Subsystem name (default = ZARA)

This parameter controls the exit for scratch tape selection using ZARA.

A standard exit is available for the ZARA tape management system. PDSNSTMS is not required.

The ZHCZ2500 program is called when a HCC **FREEVOL** command is executed.

The fromvol, tovol suboperands define the range for the volser to be selected and nnnnn defines the maximum number of scratch volsers to be selected.

The TMSEXIT and TMS=xxxx statements are mutually exclusive; only one of them can be defined.

Refer to the SCRATCH TAPE PROCESSING and USER EXITs Sections in the System Reference Guide for further information.

Default: `TMS=ZARA,volser,volser,3000,SSI=ZARA`

Examples:
```
TMS=ZARA,T00001,T20000,5000,SSI=ZARx
TMS=ZARA,T00001,T20000,SSI=ZAR0
```

Only one VOLSER range can be defined; use TMSEXIT when using several ranges.

Use the TMSEXIT statement as well when several input files are to be processed.

A ZARA exit with ZARA API is available as user exit X01ZARA2 as from PTF status ZY00099 and can be used together with TMSEXIT.

3.92 TMSEXIT

TMS USER EXIT	(optional)
TMSEXIT=module-name[,fromvol,tovol[,nnnnn]]	

module-name	Load module name which **must** be 8 characters long
fromvol	Lowest VOLSER number
tovol	Highest VOLSER number whereby fromvol to tovol must be in ascending sequence (alphanumeric as well).
nnnnn	Maximum number of selectable scratch tapes (Default = 3000)

This parameter controls the user exit for scratch tape selection. The user must create the user exit for his installation environment. PDSNSTMS identifies the input file for scratch tape information.

This exit is called when a HCC **FREEVOL** command is executed.

The fromvol, tovol suboperands define the range for the volser to be selected and nnnnn defines the maximum number of scratch volsers to be selected.

The TMSEXIT and TMS=xxxx statements are mutually exclusive; only one of them can be defined.

The module names should not start with the HLQs, HAC or ZHC because these are reserved for the HCC modules.

Refer to the SCRATCH TAPE PROCESSING and USER EXITs Sections in the System Reference Guide for further information as well as to examples in the hlq.ZHC....SAMP library.

A ZARA exit with ZARA API is available as user exit as from PTF status ZY00099 under X01ZARA2 in the hlq....SAMP library. The constant SUBSYSTEM=ZARA (also refer to the comments in the program) must be adapted and the program compiled together with ZARA Maclib and HCC Samp.

This exit can be used with ‘TMSEXIT=X01ZARA2’, fromvol,tovol,nnnnn’. The ZARA Loadlib must be concatenated with the Steplib or be available in the LINKLST linkage for the HCC start. This also implies that the ZARA Loadlib APF must be authorized. The API (ZARAAPI1) should also be checked as to whether the module ZARA 1.2 has been linked correctly, the Entry Point should be ZARAAPl because API was not executable during a customer test of this EXIT.

Default: None

Example: `TMSEXIT=USEREXIT,AAAAAA,999999,9500`

3.93 UCBATI

UCB ATTENTION INDEX	(optional)
UCBATI=nn	

nn UCB attention index (decimal)

This parameter sets the UCB attention index for the HCC-AMU/AR communication with EXCP.

HCC uses the default value X'08' to branch to the attention table. This value is reserved in MVS for user applications.

The UCBATI parameter can be used to set this value to an unused value when the above value is in use by an application.

This parameter has no effect during communication using VTAM LU 2 / LU 6.2.

The IECDATB macro in SYS1.AMODGEN contains further information.

Default: `UCBATI=08`

Example: `UCBATI=32` (corresponds to X'20')

3.94 UNIT TYPE=CAR

UNIT DESCRIPTION	(mandatory)
UNIT=cccccccc,nn,s,r[,ALTCUU=cuu2][,FPMALOC=coor1,coor2][,TYPE=CAR][,CL=c]	

cuu1	MVS unit address	(0001-FFFF)
nn	AML unit ID	(01-99) or (01-FF)
s	AML system number	(1-2)
r	Servicing robot	(1-2)
cuu2	Alternative MVS unit address	(0001-FFFF)
	FPMA[1)] tape unit assignment:	
coor1	Start coordinate	
coor2	End coordinate	
CAR	Tape unit	(Default)
c	Y = HCC controls cleaning activities	(Default)
	N = AMU controls cleaning activities	

The UNIT statement TYPE=CAR allocates IBM 3480/90 cartridge stations (and compatible units) to the AML systems and the corresponding robots.

Specified MVS unit addresses (cuu or device) must be defined in all MVS systems involved.

The AML unit IDs need not:
- start at 01,
- be ascending and
- contiguous.

ALTCUU can be used, with a differing generation, to assign the same physical unit a second MVS unit address and a different CPU.

FPMALOC allocates a cartridge station a defined FPMA area.

Up to 255 AML units (01-FF) can be defined for UNITNUM=HEX.

When the AMU should control all cleaning activities for all the UNITs defined in HACCPARM, use the CLEAN=AMU statement instead of the CL=N parameter that must be specified for each UNIT.

Examples:

```
UNIT=04A0,01,1,1,FPMALOC=03020101,03020215
UNIT=04A1,02,1,1
UNIT=04A2,03,1,1
UNIT=04A3,04,1,1
UNIT=0480,05,1,2,ALTCUU=0AA0,FPMALOC=03010801,03010825
UNIT=0481,06,1,2,ALTCUU=0AA1
UNIT=0920,07,2,1
UNIT=0921,08,2,1
```

This example describes 2 AML systems:

- 1 twin-robot system
- 1 single robot system

The following must be performed when UNIT statements are changed:

- HAA GENERATE COORDINATE RECORDS FROM HACPARM1
- HCC start with SSI=Y and FMTU=Y (format UNIT-LOG)

3.95 UNIT TYPE=IOS

EINHEITEN BESCHREIBUNG	(mandatory)
UNIT=cccccccc,nn,s,r[,TYPE=IOS][,CAP=xxx]	

cccccccc	Library name for optical disks	
nn	AML unit ID	(01-99) or (01-FF)
s	AML system number	(1-2)
r	Servicing robot	(1-2)
IOS	Input/output station	
xxx	Maximum unit capacity Only valid for TYPE=IOS	(Default = 144)

UNIT TYPE=IOS assigns IBM 3995 jukeboxes to the AML systems and the corresponding robots.

The AML unit IDs need not:
- start at 01,
- be ascending and
- contiguous.

Example: `UNIT=ODLIB1,09,2,1,TYPE=IOS,CAP=144`

The following must be performed when UNIT statements are changed:

- HAA GENERATE COORDINATE RECORDS FROM HACPARM1
- HCC start with SSI=Y and FMTU=Y (format UNIT-LOG)

Up to 255 AML units (01-FF) can be defined for UNITNUM=HEX.

3.96 UNIT TYPE=OAD

UNIT DESCRIPTION	(mandatory)
UNIT=cccccccc,nn,s,r[,TYPE=OAD]	

cccccccc	Drive name for optical disks	
nn	AML unit ID	(01-99) or (01-FF)
s	AML system number	(1-2)
r	Servicing robot	(1-2)

OAD Operator Accessible Drive

UNIT TYPE=OAD assigns external drives for IBM 3995 jukeboxes to the AML systems and the corresponding robots.

The AML unit IDs need not:
- start at 01,
- be ascending and
- contiguous.

Example: `UNIT=ODDRV5,10,2,1,TYPE=OAD`

The following must be performed when UNIT statements are changed:

- HAA GENERATE COORDINATE RECORDS FROM HACPARM1
- HCC start with SSI=Y and FMTU=Y (format UNIT-LOG)

Up to 255 AML units (01-FF) can be defined for UNITNUM=HEX.

3.97 UNITNUM

AML UNIT INCREMENT	(optional)
UNITNUM=HEX	

This statement serves to count the AML units in hexadecimal sequence. This supports defining up to 255 tape units (01-FF). AML units are counted in decimal, up to 99, when this statement is omitted.

Default: None

Example: `UNITNUM=HEX`

Refer to the UNIT statement description for further information.

3.98 UPDEXIT

MESSAGE EXIT	(optional)
UPDEXIT=modulename	

module-name Load module name

This parameter controls the User exit for Archive updates.

The customer is responsible for the User exit itself.

UPDEXIT receives control before an updated Archive mirror record is rewritten.

Register 1 transfers a parameter list with the following information:

<W1> Pointer to record length
<W2> Pointer to the original Archive mirror record
<W3> Pointer to the updated Archive mirror record

Register 15 must contain one of the following return codes when the exit returns:

0	=	ok	No changes	No message
4	=	ok	Changes made	Message HAC371I
8	=	nok	Error	Message HAC430I
12	=	ok	Changes made	No message

The UPDEXIT module must be reusable.

The module name is freely selectable.

Default: None

Example: `UPDEXIT=XYLMOD`

3.99 VI

INSERT CONTROL	(optional)
VI=DIR	

Specifying this parameter generally means that the PC controls the volume insert, that is the AR (archive computer) decides on the cartridge location.

VI=DIR prevents a further selection in the **VI** command.

Dynamic area usage, priority control by HCC as well as insert using target coordinates (FPMA, tower) are all excluded.

The control can be selected in the **VI** command when this parameter is not specified.

Default: None

Example: `VI=DIR`

Only valid for ABBA/1 systems

3.100 VIEXIT

INSERT EXIT	(optional)
VIEXIT=modulename	

module-name Load module name

This parameter controls the user exit for cartridge insert.

The customer is responsible for the User exit itself.

The insert exit receives control after each insert. The Archive mirror record of the inserted cartridge is then available.

The Appendix of the System Reference Guide contains further information under Modifying User Exits.

The module names should not start with the HLQs, HAC or ZHC because these are reserved for the HCC modules.

Default: None

Example: `VIEXIT=XYLMOD`

3.101 VOLGR

SCRATCH TAPE SELECTION USING SCRATCH GROUPS (mandatory)
VOLGR=fromvol,tovol,nnnnn[,S=s],group[,PREFER=DSN|JOB]

fromvol	Lowest VOLSER in the group	
tovol	Highest VOLSER in the group	
nnn	Scratch warning limit 001-999	
s	AML system number	(Default S=1)
group	Scratch group ID	(1-6 characters)
PREFER	Priority within Scratch group selection	(Default: DSN)

The VOLGR statement selects scratch cartridges using SCRATCH GROUP IDs.

When an AML system number is not specified, selection is made using the AML system defined in the Archive mirror based on the unit demanded in the MVS mount message.

Normally, only the two groups "PRIVAT" and "SCRTCH" are used as group names in the MVS standard environment. At least one VOLGR statement is mandatory.

The SCRATCH group ID is truncated from the 7th character without warning; this problem can arise for SCRATCH group IDs defined longer than 6 characters (allowed under certain circumstances in TMS systems) and the same applies when SCRATCH group IDs shorter than 6 characters are used within a JES3 environment.

PREFER=DSN - a defined DSNGR statement has selection priority over a possible JOBGR statement within the VOLGR statement.
Search algorithm: DSNGR - JOBGR - VOLGR (default)

PREFER=JOB - a defined JOBGR statement has selection priority over a possible DSNGR statement within the VOLGR statement.
Search algorithm: JOBGR - DSNGR - VOLGR

Default: None

Examples:

```
VOLGR=000000,004999,00030,PRIVAT
VOLGR=000000,004999,00030,SRCTCH
VOLGR=011001,011999,00010,GREEN
VOLGR=021001,022999,00020,S=2,PRIVAT
VOLGR=021001,022999,00020,S=2,SCRTCH
```

After the mount message TMS0001 IEF233A M 480,GREEN,..., HCC substitutes a scratch cartridge from the number range 011001-011999. A warning message is output when less than 10 cartridges are available according to the HCC Archive mirror. HCC triggers a **FREEVOL** command at this point when AUTOFREEVOL=YES was defined.

When an automatic tape management is used, an attempt should be made to only integrate the MVS standard (SCRTCH,PRIVAT) in the organization. The reasons are:

- IBM/DFSMS concepts
- FPMA support

When FPMA support is in use, it is recommended to define the corresponding AML system in both HACCPARM statements.

3.102 WTOEXIT

WTO EXIT	(optional)
WTOEXIT=modulename	

module-name Load module name

This parameter controls the User exit for HCC messages.

The customer is responsible for the User exit itself.

WTOEXIT receives control before a HCC message is sent to the console.

Register 1 transfers a parameter list with the following information:
<W1> Pointer to HCC message (Maximum 108 chars)

Register 15 must contain one of the following return codes when the exit returns:

0	=	ok	No changes	No message
4	=	ok	Changes made	Message HAC371I
8	=	nok	Error	Message HAC430I
12	=	ok	Changes made	No message

The WTOEXIT module must be reusable.

The module name is freely selectable.

Default: None

Example: `WTOEXIT=XYLMOD`

4 HACPARM2 STATEMENTS

4.1 POOLGR STATEMENT

VOLSER AREAS & ESOTERIC NAMES	(HACEDT)
POOLGR=fromvol,tovol,XXXXXXXX	

fromvol	Lowest VOLSER in range
tovol	Highest VOLSER in range
XXXXXXXX	Esoteric name

Example:

```
POOLGR=010000,014799,POOL1
POOLGR=014800,016599,POOL2
POOLGR=020000,024999,POOL2
POOLGR=030000,034999,SYSSQ
POOLGR=...
```

A POOLGR statement is mandatory for each POOL for which an allocation modification is to be performed.

The sequence of the POOLGR statements determines the allocation of the unit name; the first number found is used when the VOLSER number ranges overlap.

The POOLGR and the VOLTAB statements are mutually exclusive.

This table can be re-initialized at any time with the JCL procedure HACCISSI.

This procedure is mandatory when HCD and dynamic UNIT modification are implemented (refer to MVS allocation modification).

4.2 VOLTAB STATEMENT

VOLSER TABLES & ESOTERIC NAMES	(HACEDT)

```
VOLTAB
YYYYYY,XXXXXXXX
```

VOLTAB	Identification as VOLSER table
YYYYYY	VOLSER with wildcard
XXXXXXXX	Esoteric unit name

Example:

```
VOLTAB
001001,3480
001002,TAPE
00100%,ROB1
001012,ROB2
0010%%.CTAPE
001100,ROB0
001%%%,3480
%%%%%%,MTAPE
```

A VOLTAB statement is mandatory for each VOLSER (Group) for which an allocation modification is to be performed.

The sequence of the statements determines the allocation of the unit name; best fit at the beginning, generic towards the end, top down.

The POOLGR and the VOLTAB statements are mutually exclusive.

This table can be re-initialized at any time with the HACCISSI procedure.

This procedure is mandatory when HCD and dynamic UNIT modification are implemented (refer to MVS allocation modification).

INDEX

3

3480 UNITS 3-29
3490 UNITS 3-29

A

ABSWAIT 3-4
ACL 3-29

..... ,
AML
  Configuration 3-101
  Single systems 3-101
  Twin systems 3-101
....
AML Units 3-31, 3-46, 3-49
....
AUTOCMD 3-5
AUTOFREEVOL 3-6
AUTOMATIC
  EJECT CL-TAPE 3-10
AUTOREPEAT 3-7

B

BUFNO 3-8

C

CLEAN 3-10
COMDEFn 3-12
  EXCP 3-12, 3-14
  VTAM 3-12, 3-14
COORDINATES
  LDEV Statement 3-31, 3-46, 3-49
  Position 3-31, 3-46, 3-49
  Row 3-31, 3-46, 3-49
  Segment 3-31, 3-46, 3-49

D

DEVICE TYPE 3-15
DEVTYPE 3-15
DFHSM 3-55
DISPATCHING 3-83, 3-89
DSNGR 3-16

E

EJDSN 3-18
EJECT
  through DSNAME 3-18
  through VOLSER 3-20
EJVOL 3-20
....
..... 4-1
EXCP Communication 3-12

F

FPMADEF 3-21
FPMAKEC 3-22
FPMALOAD 3-23
FPMAMVMAX 3-24

H

HACCISSI 4-1, 4-2
HACCPARM STATEMENTS 2-1
HACCPARM-SYNTAX 2-2
HACNET 3-25
HACPARM1
  ABSWAIT 3-4
  AUTOCMD 3-5
  AUTOFREEVOL 3-6
  AUTOREPEAT 3-7
  BUFNO 3-8
  CLEAN 3-10
  COMDEFn
    EXCP 3-12, 3-14
    VTAM 3-12, 3-14
  DEVTYPE 3-15
  DSNGR 3-16
  EJDSN 3-18
  EJEXIT 3-19
  EJVOL 3-20
  FPMADEF 3-21
  FPMAKEC 3-22
  FPMALOAD 3-23
  FPMAMVMAX 3-24
  HACNET 3-25
  JES 3-27
  JOBGR 3-28
  KEEPWT 3-29
  LANG 3-30
  LDEV 3-31, 3-46, 3-49
  LOCDESC 3-47
  MAXCOOR 3-51
  MAXTSO 3-52
  MAXVOL 3-53
  MOEXIT 3-54
  MSG 3-55, 3-72
  MSGPREFIX 3-76
  ODSCR 3-77
  OVERVIEW 3-1
  PDSNtype 3-78, 3-82
  PRTY 3-83, 3-89
  ROUTCD 3-90
  SMFRECORD 3-91, 3-94
  SSINAME 3-95
  STAM 3-96
  STATISTICS 3-97
  STIMER 3-98

STORGRP 3-99
SWAPLIM 3-100
SYSDEFn 3-101
TMS 3-103, 3-105, 3-111
TMSEXIT 3-113
UCBATI 3-115
UNIT 3-116
UNITNUM 3-120
VI 3-122
VIEXIT 3-11, 3-75, 3-93, 3-121, 3-123, 3-126
VOLGR 3-124
HACPARM2
ALTERNATE PDS 4-1
POOLGR 4-1
VOLTAB 4-2

I

INSTALLATION
HACPARM2 4-1
POOLGR 4-1
Interface
EXCP 3-12

J

JES 3-27
JES2, JES3 3-27
JOBGR 3-28

K

KEEPWT 3-29

L

LANG 3-30
LDEV 3-31, 3-46
LOCDESC 3-47

M

MAXCOOR 3-51
MAXTSO 3-52
MAXVOL 3-53
MOEXIT 3-54
MSG 3-55, 3-72
MSGPREFIX 3-76

O

ODSCR 3-77

P

.....
PDSNARCH 3-78
PDSNEXC 3-79
PDSNMLGn 3-80
PDSNULOG 3-82
POOLGR 4-1
PRIORITY CONTROL 3-83, 3-89
PRTY 3-83, 3-89

R

.....
ROUTCD 3-90

S

SCRATCH
GENERIC DSNAME 3-16
GENERIC JOBNAME 3-28
VOLSER Groups 3-124
WARNING LEVEL 3-125
SEQF 3-107
SMFRECORD 3-91, 3-94
SSINAME 3-95
STAM 3-96
STATISTICS 3-97
STIMER 3-98
STORGRP 3-99
SWAPLIM 3-100
SYS1.PROCLIB
HACPARM2 4-1
SYSDEFn 3-101

T

TAPE MANAGEMENT SYSTEM 3-124
.....
.....
TLIPW 3-102
TLMS 3-16
TMS 3-103, 3-105, 3-111
TMS EXIT 3-113
TMS STANDARD EXITS 3-103, 3-105, 3-111
TRANSFER LOG
STIMER 3-98

U

UCBATI 3-115
UNIT 3-116
UNITNUM 3-120
USER EXIT
TMS 3-113
VI 3-11, 3-75, 3-93, 3-121, 3-123, 3-126

V

VI 3-122
VIEXIT 3-11, 3-75, 3-93, 3-121, 3-123, 3-126
VOLGR 3-124
VOLTAB 4-2

NOTES